KAVO

UniQA

Uniquely premium.

KAVO
Dental Excellence

KaVo – The dental unit.
An investment in your health.

KaVo dental units are your dependable practice partners.KaVo dental units are unrivalled when it comes to promoting a natural posture with exceptional freedom of movement and short reach distances. They provide the ideal ergonomic solution for every conceivable treatment situation. We aim to combine the highest standards of hygiene with an aesthetic design to help create a feel-good experience for users and patients alike. This perfectly harmonised package for the dental workplace includes a long service life and absolute reliability – Made in Germany.

ERGONOMICS

The ultimate in comfort for dentists and patients alike. The wellbeing and long-term health of your practice team is our top priority.

USER EXPERIENCE

Ingenious functionality meets smart customisation – a winning combination for efficient, successful dental practices.

HYGIENE

Greater safety in every process – discover what comprehensive hygiene looks like with KaVo. Experience our fully automatic processes and smart, intuitive hygiene solutions for yourself.

QUALITY

Proven trustworthiness Made in Germany – KaVo has been offering the ultimate in quality for over 100 years. We use only high-quality, robust components and check all products for strict compliance with the most exacting international and internal quality standards. For added durability, stability and reliability.

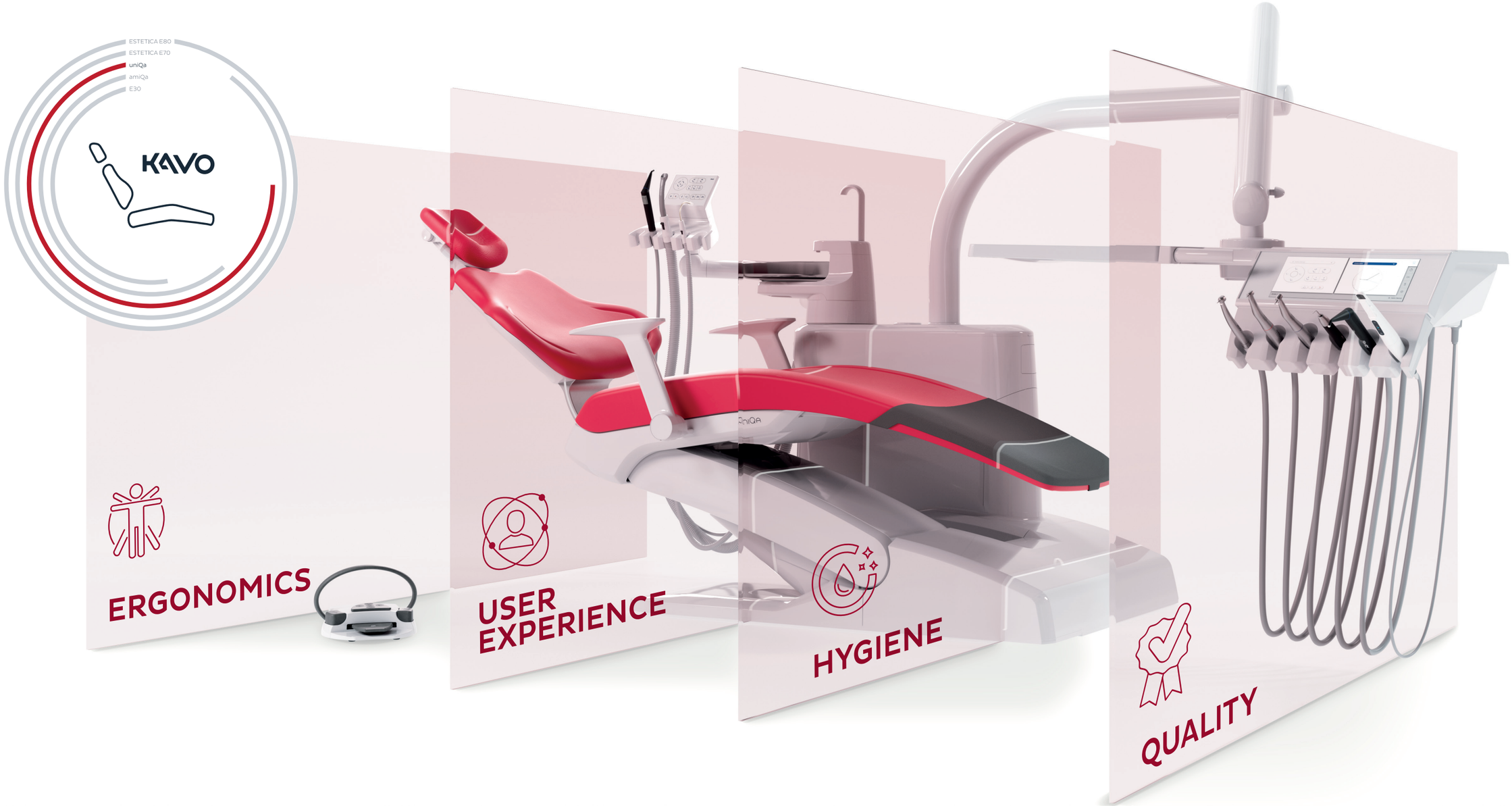

Unique ergonomics – tailored to you

- Optimal legroom and a slim backrest and headrest facilitate access to the patient.
- Head-to-toe comfort for patients and users
- A relaxing atmosphere: indirect lighting and SPAlight.
- Custom adjustment with wide height adjustment range and high load capacity
- Lightweight, multifunctional and ideal for relaxed working: the ergonomic KaVo foot control
- See more with the new KaVo Lumina treatment light

Cutting-edge technology, intuitive handling and maximum efficiency for a premium practice experience

- Responsive, intuitive, quick and easy to use: high-resolution 7” and 12” touch display
- Efficient working: rapid access to all functions optimises your daily work.
- Central control: quick and easy operation of patient chair, hygiene and treatment light functions for dentists and assistants.
- Straightforward patient communication at the unit for trust and transparency.

A feel-good experience before, during and after treatment

- Maximum treatment safety and reliability: KaVo DVGW water block – the undisputed pioneer
- Fully automated hygiene centre takes care of water-bearing lines and suction systems
- Expert guidance with easy step-by-step instructions
- Unique suction germ reduction with gel ensures impressive performance for suction hoses

Designed, developed and manufactured in Germany

- Extremely sturdy: solid base formed of 143 kg metal
- High-quality plastics: certified for exacting requirements in everyday practice
- Low-maintenance and easy to service: cutting-edge technology meets tried-and-tested electronic components
- Reliable even under heavy loads: tested for a service life of over 10 years and at loads of 660 kg
- Rapid professional assistance: expert service in person and via the hotline

YOUNIQUE – tailored to you.

The modern dental practice offers more than just dental treatments.

It is an expression of the dentist's personality: design, equipment, service and the type of advice and treatment all come together to create a unique signature. The practitioner's personal take on work-life balance, efficiency and having fun also find their way into the practice rooms.

At the same time, today's patients expect more than just a standard service – they want to feel safe, comfortable and understood.

As the heart of the practice, the KaVo uniQa rises to these technical requirements and emotional needs. Intelligent features, the usual KaVo precision, and high standards of quality support successful everyday treatment now and for a long time to come. At the same time, the KaVo uniQa leaves enough room to express its owner's individuality and emphasises their utter distinctiveness.

KaVo uniQa – a unique take on Dental Excellence.

GENUINE KAVO QUALITY AT ITS FINEST.

The new KaVo standard – a unique blend of design, precision, technology and usability, down to the finest detail.

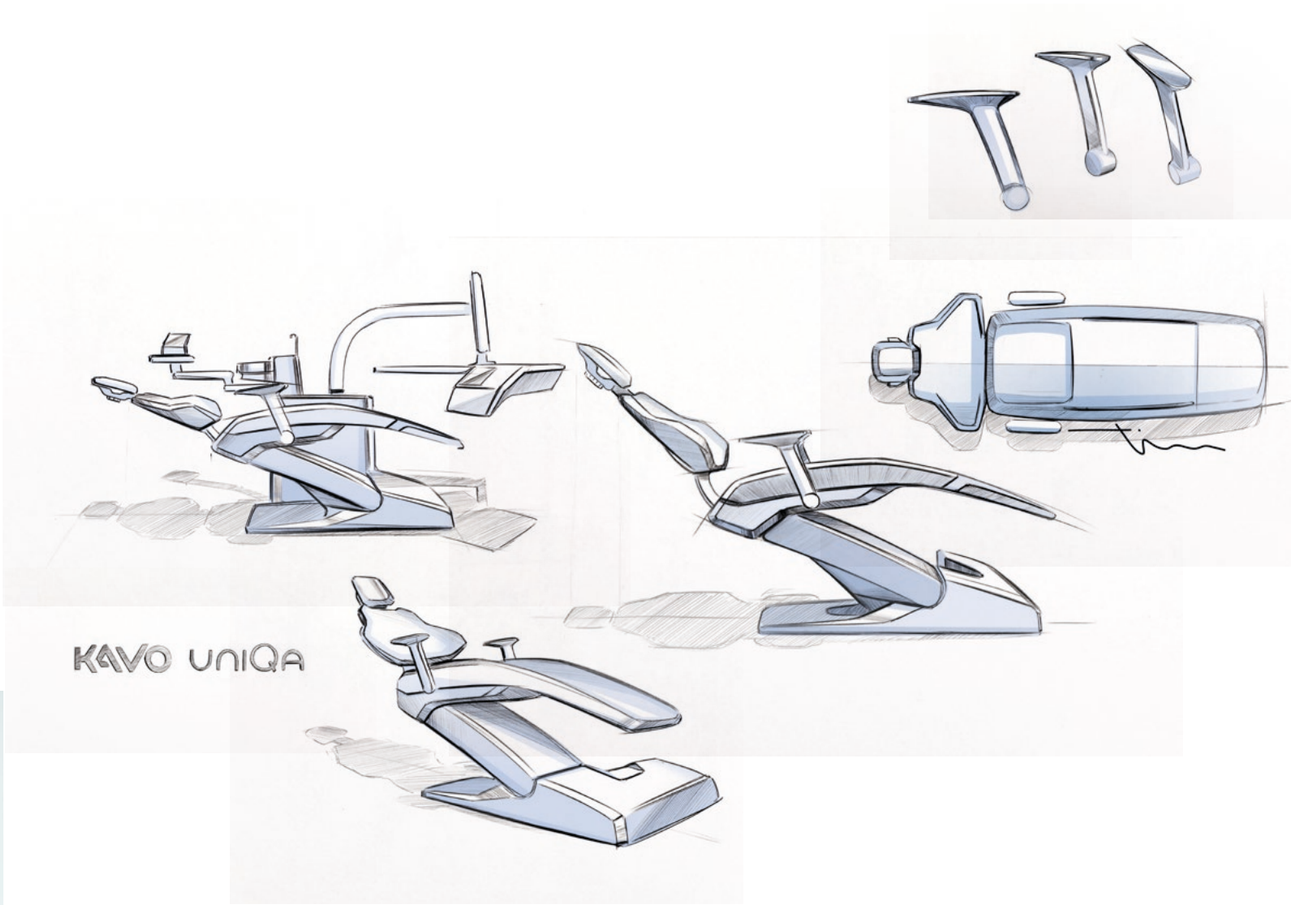

Creating smart, unique products requires clear goals, lots of passion for the cause, a consistent focus on optimisation in the right places and plenty of team spirit. Products that meet the demands of modern dental practices. Products that spark joy. Products like the new KaVo uniQa.

In a moderated discussion, Armin Imhof, Chief Technical Officer at KaVo, and Jürgen Hinderhofer, designer and Managing Director of SLOGDESIGN, take a look at exactly what it is that makes the new KaVo uniQa unique – and provide fascinating behind-the-scenes insights into the development and design of the product.

In your opinion, what makes the new KaVo uniQa a quintessential KaVo dental unit?

Armin Imhof (AI): First and foremost, KaVo always stands for precision, user-friendliness, value, reliability and, of course, a certain degree of digitalisation. A KaVo product is a working tool that offers the very highest performance. Once again, we're living up to this with our new KaVo uniQa dental unit.

The name "uniQa" suggests something unique and unmistakable. What key aspects are particularly noteworthy in this context?

AI: By launching the uniQa, we have brought what was previously at the premium level into the mid-price segment. The features of our new dental unit were previously only available within the high-price segment.
During development, we focused on four main things: the patient chair, the hygiene functions, the touch operation and, of course, the design. These four aspects are key to the distinctive character of the uniQa. Naturally, our focus was also on the typical KaVo workflow – we wanted to avoid making unnecessary changes to familiar, well-functioning processes for dentists.

Jürgen Hinderhofer (JH): In terms of design, the challenge was primarily about providing more technology in a more compact form. For instance, we gave many components a bevelled edge all the way around, as this reduces the volume and gives a precise look. It sets the product apart and reflects KaVo's reputation for precision in the design itself.

AI: To sum it up, I'd say that while we have accommodated many highly technical features, we've also been able to develop an intuitive, smart and easy-to-use concept, combined with a high-quality design and concise, distinctive style. In doing so, we've advanced the product by adopting excellent, tried-and-tested features and implementing new features and innovations. The overall package is simply unique – both technologically and aesthetically.

Time is a precious commodity, especially in a dental practice. As such, an efficient workflow and great usability are crucial attributes for a dental unit. How do you approach all of these considerations at KaVo?

AI: At KaVo, we see it as our responsibility to find smart answers to efficiency issues for our customers. We keep a close eye on how practice teams work and try to make their lives easier. One seemingly small example of this is our magnetic closures for the built-in system for hygiene products. The uniQa uses a magnetic system to centre and apply the covers. Such features not only simplify and speed up the process, but are also a pleasure to use. At the end of the day, it is these little things that make a real difference.

JH: And let's not forget the aspects that promote hygiene: throughout the entire process, the design team endeavours to avoid creating joints or edges that are hard to clean. Ultimately, the successful overall product is always the sum of the many well-designed details. That's where the quality lies.

ARMIN IMHOF

> "The overall package is simply unique – both technologically and aesthetically."

You raised the topic of quality. In your opinion, what constitutes good quality and how is this manifested in the KaVo uniQa?

JH: In addition to the technical features and the usability and hygiene issues we've already mentioned, the feel of the dental unit also plays a role, of course. How do the surfaces or the instruments feel when I take them out of their holder? How do I feel about the upholstery material? Is it unpleasantly cold to the touch, or does it have a matt, velvety feel and a wellness vibe, like with the uniQa? True quality comes across via the sense of touch.
Selecting the right materials ticks all the boxes – functionality, durability, value for money and design.

JÜRGEN HINDERHOFER

> The fact is that sustainable, long-lasting products require exceptionally high-quality materials. That's why KaVo ensures superb quality in every single detail.

The cover also requires a scratch-resistant, chemically resistant and UV-stable material to prevent yellowing. That calls for high-quality materials, too, so we used premium cast aluminium parts here.

AI: Yes, that's right. Durability and precision both stem from a high-quality base material. Durability ensures a phenomenally good price-performance ratio and as little downtime as possible. Precision makes daily work easier, because when you perform the same tasks over and over every day, precise functionality is essential. The workflow must also function easily and reliably in terms of ergonomics. A dental unit can last up to 20 years in a dental practice. Our aim is for it to be a pleasure to use every day and meet the high expectations of the practice team.

Individualisation is also becoming increasingly important. How has the demand for individuality influenced the design?

JH: This is amply reflected in the design. Individualisation has a lot to do with colour, among other things. Colour is an important design element, not least because it affects the mood of a room. Warm tones have a very different effect than icy or pastel shades.
Practitioners are increasingly looking to implement harmonious colour concepts throughout their dental practices or create different looks in different practice rooms by giving them each their own colour concept. Again, there are all sorts of approaches for implementing your own ideas and preferences, but a KaVo uniQa is always part of the picture and can be coordinated with the look you want by selecting the upholstery or paint colours.

AI: That's exactly the point. More and more dentists are developing special interior concepts for their practices, and then looking to integrate their dental units into them. These might be colour concepts or special themes like "tranquility" or "nature".
The uniQa expresses the uniqueness and individuality of each dentist; after all, body shape and working methods differ from person to person. With this in mind, the uniQa also offers plenty of options for flexible configuration to the user's specific preferences. As a premium manufacturer, we have to offer products that meet these requirements for modern practice operations and modern dentistry.

ARMIN IMHOF

> As a premium manufacturer, we have to offer products that meet the requirements for modern practice operations and modern dentistry.

JÜRGEN HINDERHOFER

> Good design is exacting, unobtrusive, authentic and planned down to the very last detail. Patients always appreciate these things.

Patients are also receiving greater focus. To what extent are they also impacted by the design of a dental unit?

JH: Good design is exacting, unobtrusive, authentic and planned down to the very last detail. Patients always appreciate these things. The KaVo uniQa exudes dependability. The coherent design definitely has a certain psychological effect on the patient.

AI: That's exactly the issue. It's about making a highly complex product with thousands of functions look pared back and simple, so that it's more akin to a piece of furniture. The patient chair is a good example: it looks very "neat" – there are no screwed-on elements – but it still has countless functions. And that was the aim: not to put people off with a utilitarian design, but rather to create a feel-good experience through the appearance of the product.

If you had to describe the KaVo uniQa in no more than three phrases, what would they be?

AI: Outstanding ergonomics in a beautiful package – that sums it up for me. The KaVo uniQa is a premium working tool that also looks phenomenally good. For me, these two characteristics – ergonomics and design – are the main distinguishing features of a KaVo dental unit.

KaVo uniQa – the highlights:

The patient chair – designed for ergonomic comfort

1. Modern and compact chair design in a sporty look for the ultimate in ergonomic comfort
2. Highest position: 830 mm; lowest position: 350 mm
3. Integrated Trendelenburg movement for your patients
4. Load capacity up to 185 kg

The dentist element – a brilliant display

5. Next-generation touch display with brilliant resolution and impressively rapid response time
   - T-table with 12" widescreen and practical, personalisable widgets
   - S-table and Cart with 7" screen
6. Intuitive operating concept for rapid direct access to all key functions for smooth, efficient treatment processes

Design highlights for a stylish look

7. 14 upholstery colours from the "Inspired by Nature" collection create a distinctive look
8. Standard upholstery with design lines and optional premium footrest protector
9. For unmistakable extra comfort: RELAXline upholstery with a soft, leather-like surface, comfortable memory foam and striking design seams
10. Clean lines and the new lighting element in the curve segment provide indirect light and a relaxed ambience

Hygiene – automated for efficiency

11. Convenient hygiene processes: Integrated rinsing programs, DEKAmat and OXYmat, and the integrated hygiene centre for instrument and suction hoses, ensuring time-efficient automated cleaning

Patient communication – integrated, simple and efficient

12. KaVo DIAGNOcam Vision Full HD: 3-in-1 intraoral camera for optimised caries diagnostics in full HD resolution
13. New, high-resolution KaVo screen with improved image quality
14. Easy and network-independent patient communication with the standalone KaVo CONNECTbase
15. CONNECTlink, the interface between CONNECTbase and the matching imaging or patient management software, enables direct transfer of images into the patient file

Accessories – perfectly coordinated

16. Ultra-lightweight KaVo Lumina treatment light with UX Light Technology, innovative SPAlight and COMPOshape mode
17. High-performance KaVo eSCALER for effective ultrasonic tooth cleaning – Made by KaVo
18. Wow your patients with precise imaging and comfort: The KaVo ProXam iOS intraoral scanner for digital impression taking in record time and the KaVo ProXam iX 2D intraoral X-ray device

FOLLOW YOUR INTUITION.

The self-explanatory user interface of the dentist element, featuring the latest-generation high-quality glass touch display, helps you find your way around with ease, so you can enjoy a smooth, speedy and relaxed workflow.

Greater freedom – greater individuality

"One size fits all" is a thing of the past. We believe that your dental unit should be as unique as you are. That's why you can customise the equipment of your KaVo uniQa to your specific requirements, down to the finest detail. The flexible choice of instruments makes it easy to equip the dentist and assistant elements to suit you and your team. Many functions can be individually set for the specific practitioner, including name, treatment types and direct key assignment on the homescreen. And if the focus of your treatment work changes – no problem. You can make adjustments at any time, even retrospectively. For instance, upgrading from five to six trays or retrofitting endodontic or surgical functions.

Greater comfort – greater satisfaction

Enjoy superb convenience: Access all the functions and parameters of integrated special devices that you need during treatment quickly and easily at any time using the touch display or foot control. You can see all of the information all the time on the dentist element. Program your specific treatment processes at any time as required. Find the dentist element position that is most comfortable for you. Whether sitting or standing. On your own or with an assistant. Table, cart or swing-arm version. Whatever your preference, you have everything under control.

Brilliant resolution

With its next-generation touch display, the KaVo uniQa is faster and more intuitive than ever before. It boasts brilliant resolution and an impressively rapid response speed.

The uniQa user interface in three words: clear, hygienic, efficient.

Simply convenient – the T-table
The T-table model offers an outstanding level of convenience. The extra-large 12.3-inch widescreen is an eye-catching feature with outstanding functionality. The chair functions are always visible on the screen, even when an instrument is removed. The array of personalisation as well as new widget options like the digital clock or adding the practice logo provide an extra dash of uniqueness. The large tray also offers extended storage space.

Simply ergonomic – the S-table
With the swing table version, you can choose whether you want preset locking positions for perfectly balanced instrument swing arms. A new, additional 70-cm position is now available alongside the short 50-cm pull-out position. The maximum hose pull-out length is 90 cm.

Simply stowed
Choose from five or six instrument holders, with each position configured according to your requirements. Or simply upgrade from five to six holders at a later date. The KaVo uniQa makes it all possible.

Simply stored
Smart reminders: call up saved parameters for up to five treatment types quickly and reliably for each instrument. And for up to six practitioners – the KaVo uniQa has you covered.

The perfect balance of power and performance

Our KaVo scalers are Made in Germany and combine precision and quality to superb effect:

The KaVo eSCALER allows for highly precise and time-efficient tooth cleaning: the linear oscillation of the tip is particularly effective, at up to 30,000 Hz. The precisely defined ultrasonic vibration, ergonomically shaped dental handpiece, daylight illumination and delicate tips, which allow users to access even hard-to-reach areas with ease, provide maximum treatment comfort for both the patient and the practitioner.

The KaVo SONICflex is an all-round pro: it can handle almost any indication and provides comfortable, enamel-friendly treatment. With gently pulsating sonic vibration at approx. 6,000 Hz and a choice of over 50 tips, this scaler is popular with patients and practitioners alike and is perfect for all areas of application, including prophylaxis, endodontics, periodontics, minimally invasive caries treatment and preparation.

Products that meet your expectations

When it comes to your instruments, you want only the best. KaVo instruments cover all areas of application and provide the best possible visibility and access to the oral cavity – so you can always offer treatment of the highest quality and precision. In combination with the lightweight, ultra-compact and smooth-running INTRA LUX KL 703 LED micromotor, you can work efficiently and fatigue-free across the entire speed range from 100 to 40,000 rpm thanks to SMARTdrive.

Specialist technology for everyone

Tip-top endodontics

With 3 different file control modes, the integrated endodontic functions save you from having to purchase an expensive endodontic device.
The integrated file database with almost 200 preset files allows you to call up, set and save key parameters such as transmission ratio and torque values via the dentist element – and add new files at any time.

The smart surgery option

Make even the most demanding procedures as comfortable as possible by equipping your KaVo uniQa with the KaVo INTRA LUX S600 LED. This is one of the lightest and smallest surgical motors.
When used in combination with KaVo surgical instruments and the integrated saline pump, you have all the functions of a modern surgical unit at your disposal.

RELAXline: designed for relaxation

The KaVo RELAXline soft upholstery combines attractive design with maximum lying comfort, ensuring relaxed positioning and a feel-good experience. The ultra-comfy memory foam moulds perfectly to the contours of the patient's body, while the soft, leather-like surface is pleasant to the touch. High-quality, hand-stitched design seams give the RELAXline range a sleek and sporty look.

Next-level design details from KaVo

KaVo's classic soft upholstery has been upgraded with new design embossing that emphasises the sporty look of the uniQa. The upholstery is optimally preserved with the stylish and practical premium footrest protector – a little detail with a big impact.

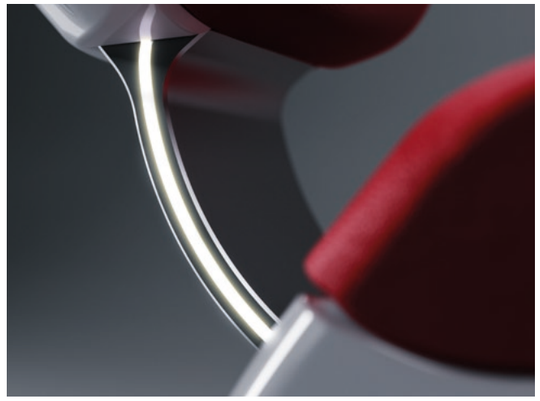

Lighting element for indirect light and a relaxing spa vibe

Big impact: the new premium footrest protector and the new design lines.

INSPIRED by NATURE

The colour collection for premium practice design

The distinctive look of the KaVo uniQa is elegantly complemented by the "Inspired by Nature" upholstery colour collection. The 14 fresh and appealing shades – from delicate pearl white to cool graphite grey – give you the chance to create aesthetic accents with your dental unit to match the latest interior trends.

MAINTAIN A HEALTHY POSTURE.

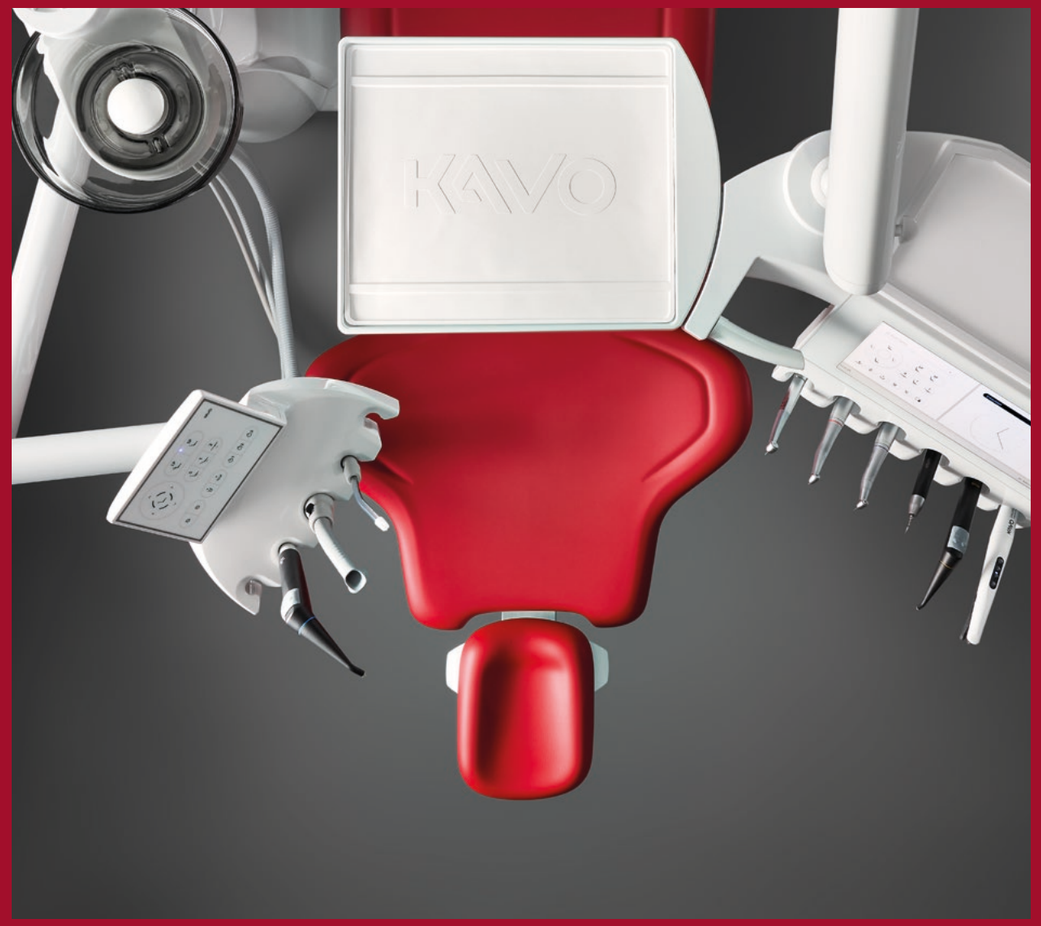

Prevent health issues and pain with the KaVo uniQa. Carry out your work under as little strain as possible and maintain a healthy posture. Experience the freedom of natural, intuitive workflows. And enable your patients to lie comfortably and relaxed at all times. Because health is our most valuable asset.

Lowest position: 830 mm; highest position: 350 mm

At your level

The KaVo uniQa is as versatile as you are. Adjust your uniQa not only to your personal requirements and habits, but also to your height. The height of the patient chair can be set at between 350 mm and 830 mm, ensuring optimal ergonomic comfort, regardless of whether you prefer to perform treatment work sitting or standing.

Make the most of your newfound freedom

From now on, you don't have to worry about where to put your legs – you get all the space you need under the KaVo uniQa patient chair. You can also position the foot control wherever you find it most comfortable – the compact design of the patient chair and the footplate provide plenty of room. For relaxed, healthy working close enough to your patients.

Perfectly positioned

The Trendelenburg inclination of the patient with the KaVo uniQa is comfortable and ergonomic in every treatment position: the footrest automatically tilts and rises to match the inclination of the backrest. This combined movement prevents the patient's back from being compressed or stretched as the backrest is being readjusted. The raised leg position supports the patient's circulation. You're literally ideally placed to provide great treatment.

Getting in and out the easy way

The armrests of the KaVo uniQa make it easier to get in and out, as they simply swivel downwards. At the same time, they offer patients a secure hold and safety during treatment, while you don't have to compromise on freedom of movement.

Perfectly positioned

Depending on the indication or patient size, you can use the flexible reversible cushion and the double-jointed headrest to find the optimal lying position for your patients, and an ergonomic position for you to work in a relaxed, focused way. Good for you. Good for your patients.

Head start

Thanks to the freely adjustable head tilt angle, you can adjust the headrest and therefore the position of the head and mouth to suit your needs. Your patients lie completely relaxed against the comfort head cushion – and you have optimal access to your working area. Comfort starts at the head.

Optimised Progress backrest: optimal working posture and access to the patient's mouth.

Utterly convenient: easy-to-operate double-jointed headrest with mechanical clamp and swivelling head cushion.

Left or right?
Either is fine!

The KaVo uniQa is all about individuality and versatility, so of course it comes as a left-handed or right-handed unit. No matter what you decide today, you can rethink your choice at any time and opt to change things up. Or you can choose to combine an S-table or cart with the right/left-swivelling assistant element, which allows you to change sides easily at any time. With KaVo, you know you've made a safe investment.

Designed for you, from head to toe.

All the right moves

Enjoy even more relaxed working with ideal reaching paths. Whether you're working alone or alongside your assistant, thanks to the large range of movement, the dentist element of the table, cart and swing-arm versions, the tray holder and the assistant element can all be positioned to suit you. In the swing-arm version, the maximum 90 cm extension of the instrument hoses and the low table height of 45 cm provide plenty of room for manoeuvre during treatment.

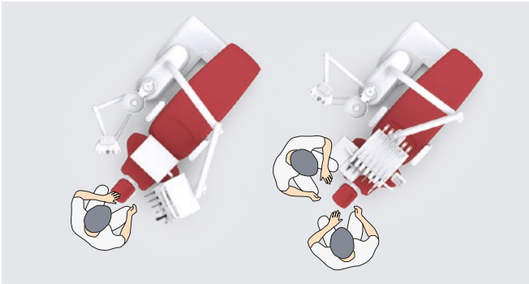

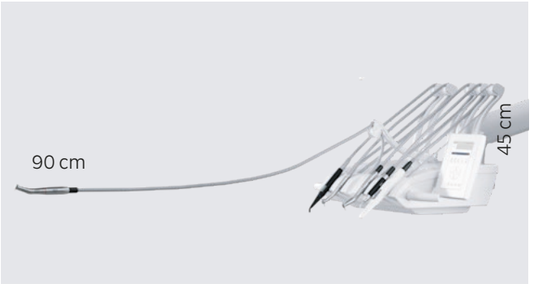

Your assistant has everything in hand

The assistant element of the KaVo uniQa is equipped with a large touch panel and a clearly configured user interface. All central patient chair and lighting functions can be accessed quickly and directly. Instruments can be configured easily and precisely according to your assistant's individual habits and preferences – including the KaVo ProXam iOS intraoral scanner. Then there's the flexible height adjustment and large swivel range – the assistant element is an ergonomic marvel!

Perfect foot control

Too much on your hands during treatment? That's a problem you won't have with the KaVo uniQa. You can now control all integrated devices and functions – including patient communication – with your foot. This also reduces the risk of cross-infection. Also available in a cordless model for more flexible placement. Everything's perfectly under control.

For an efficient workflow, you need everything close at hand,

in its designated place.

Enjoy perfect workflows. At the core of the product is the KaVo Centro carrying system, where all key devices are sensibly and ergonomically arranged in one place. This forms the fulcrum of your treatment processes, reach paths and movement sequences. The short reaching distances mean that you have everything under control at all times. You remain completely flexible when converting and upgrading to other devices and future technologies. Devices and components can be exchanged quickly and easily using the many adapters.

Custom configuration for treatment requirements – the Centro carrying system

Intraoral X-rays always at hand

A suitable intraoral X-ray device like the KaVo ProXam iX can be installed on the light mounting rod using an adapter, so you can create X-ray images optimally adapted to the radiological indication on the dental unit itself. This solution is highly precise, saves time and can be conducted without disruption to your patients.

PICTURE IT: OPTIMAL PATIENT COMMUNICATION.

Explain required treatment measures to your patients clearly and in detail thanks to high-resolution diagnostic images and pictures with brilliant colour reproduction.

DIAGNOcam Vision Full HD – Innovation at its best

Imagine there was a camera that could provide you with three clinically relevant images for caries diagnosis – strikingly sharp and in less than a second. Well, now it's possible: with the DIAGNOcam Vision Full HD you can choose whether you want to take an intraoral, transillumination or fluorescence image – or prefer to combine two or three shooting modes. The HD resolution of 1920 pixels x 1080 pixels means that all images are displayed in brilliant sharpness. The low weight and ideal balance of the camera enable ergonomic handling and fatigue-free working.

KaVo ProXam iCam – A small camera with a big impact

Use perfect images with a high depth of field and excellent colour reproduction to explain the dental situation to your patients. The easy-to-use KaVo ProXam iCam always provides you with the optimal image. The camera enables a sharp picture to be displayed at an image distance of just 9–35 mm and also has a macro mode. Image capture can be triggered by hand or with the foot control.

Show your patients

The 22" KaVo screen offers high-resolution image quality in full HD, impressive contrast values and brilliant colour reproduction. With two digital inputs, it is optimally coordinated with all the functions of imaging devices such as cameras or microscopes. For maximum hygiene, the screen has a protective glass panel, small gaps on the housing and can be adjusted with just one hand. Simply brilliant

KaVo **CONNECT** base

Your new mainstay of patient communication – integrated, simple and efficient.

KaVo CONNECTbase opens up an easy new workflow in patient communication. You can use CONNECTbase to explain your patients' dental situation to them directly on the KaVo uniQa, without installing any additional software. Simply connect your camera and get started right away. The images are displayed on the screen of the dental unit and can be compared with previously saved images.

Plug-and-play – streamlined workflows made easy

By using cameras directly with the KaVo dental unit, you can access your camera images in no time at all and then export them via USB.

It's just as easy to operate using the touchscreen display or the foot control on your dental unit, so you won't need to leave your workstation during treatment or interrupt your workflow unnecessarily.

Want to access additional inputs? No problem. Different HDMI sources can be displayed on the screen of your dental unit simply by switching over on the dentist element.

Make your treatments an experience

Alleviate boredom during waiting times and, if necessary, create a welcome distraction for your patients through visual experiences on the KaVo uniQa. The great selection of media, including a customisable welcome screen and various screen savers with a large selection of photos or slideshows, will delight patients of all ages. At the same time, you can use your screen to advertise topics related to your practice or communicate relevant information. The KaVo uniQa allows you to craft a bespoke experience.

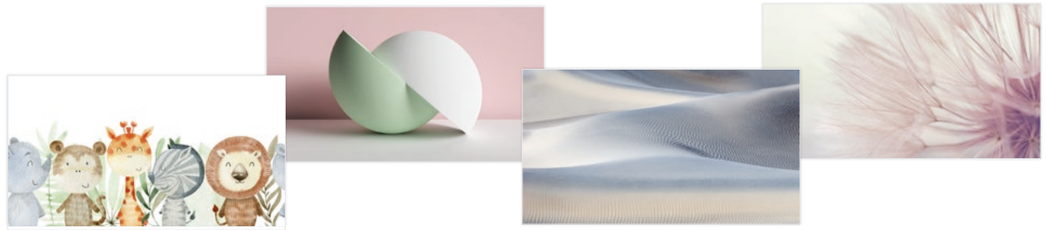

Choose from a wide variety of themes for your screen background to match the design of your practice.

KaVo **CONNECT** link

Link up your practice management software with ease.

CONNECTlink software connects your practice management software to the KaVo dental unit, enabling quick and easy transfer of patient data and clinical images. This gives you direct access to all relevant data on the touch display on the dentist element of your KaVo dental unit and allows you to add new clinical images with the KaVo cameras as usual. Thanks to CONNECTlink, these images are automatically transferred to the practice management software and assigned to the respective patient file.

The CONNECTlink software can be purchased as a separate module for your existing CONNECTbase patient communication system. To use the CONNECTlink software, you need CONNECTbase and the corresponding CONNECTlink licence on the respective KaVo dental unit.

HYGIENE MADE EASY.

Cleaning your KaVo uniQa couldn’t be easier: simply remove the main components for germ reduction. All surfaces are easy to clean, while automatic programs take care of the rinsing of instruments and the cleaning and germ reduction of the suction hoses. This guarantees thorough hygiene.

Practical ingenuity meets safe hygiene

Reliable suction and instrument hoses are cleaned automatically with the KaVo uniQa. The hygiene centre is integrated into the unit body. Connecting up your suction hoses and instrument hoses to the hygiene centre is easy and straightforward. The hygiene centre is removable and thermodisinfectable.

The power of water

Cleaning with the power of water. In the KaVo uniQa, the instrument rinsing programs are combined with the automated HYDROclean program for effortless cleaning of the suction and drainage systems. This eliminates downtime and reduces maintenance costs for your dental unit.

Automatic rinsing program

Minimising risks and ensuring that your KaVo uniQa remains compliant with RKI guidelines is easy with the pre-set cleaning programs. Run them at any time – in the morning, after every treatment, in the evening or weekly. The hygiene tab provides step-by-step instructions. Once you’ve set them up, the programs take care of rinsing and cleaning by themselves.

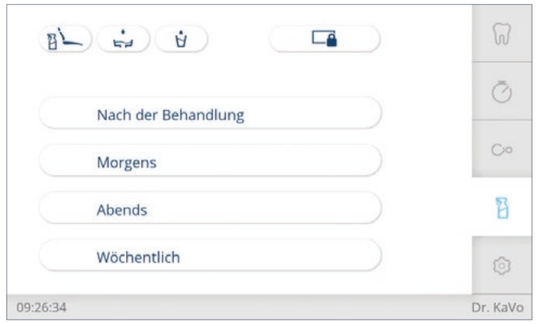

Safety, hygiene and flexibility – no exceptions, no compromises. With DVGW water block.

KaVo is setting new standards for the centrepiece of the dental unit with its next-generation water technology. The DVGW water block supplies spray and rinsing water for the instruments and the patient, and automatically dispenses the correct concentration of KaVo OXYGENAL 6. The cascade design of the water block, prevents water from the dental unit from flowing back into the drinking water system. This maintains the quality of your water supply while consistently meeting the exacting DVGW standards. The cascade path is also cleaned by flooding the collecting basin with KaVo OXYGENAL 6 concentrate. This enables the highest levels of hygiene and safety for your patients.

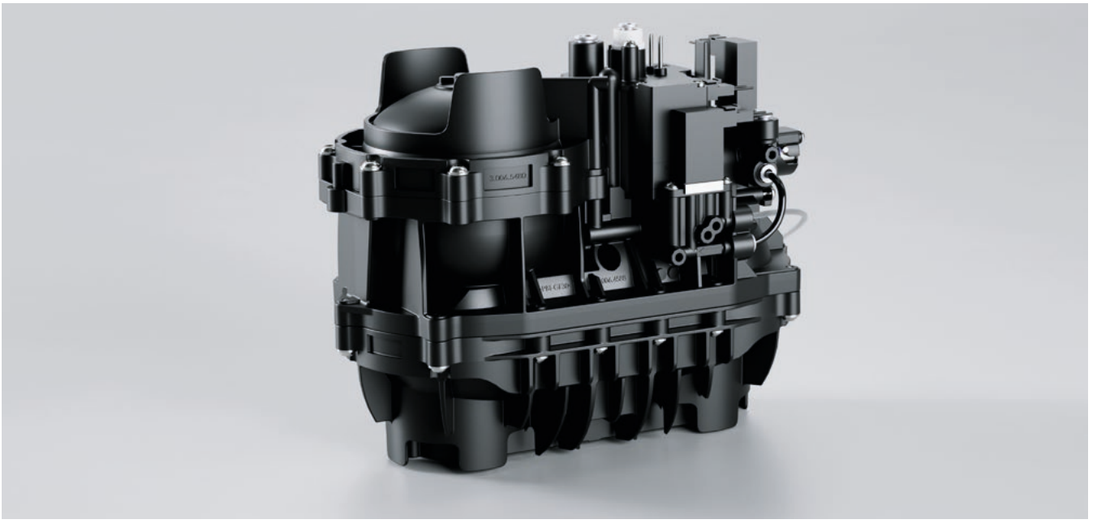

Germs don't stand a chance

Protect the lines of your KaVo uniQa against contamination. Continuous germ reduction with KaVo OXYGENAL 6 ensures that no microorganisms can spread during normal practice operations. With the intensive germ reduction program ("Weekly" cleaning program), you can protect your patients against microorganisms that can form during downtimes such as weekends or holidays, and also ensure that the cooling and rinsing fluids are of impeccable quality. For safety round the clock.

Handles, instrument holders, spittoon bowls, swing arms brackets and silicone mats are easy to remove and disinfect. The upper and lower sections of the housing are completely closed so that no dirt can get into your dental unit. The filter inserts of the suction hoses are safe and easy to replace.

Pure satisfaction

With the DEKAmat, the DEKASEPTOL bottle is integrated into the unit body for standardised effective cleaning and disinfection of suction paths. The ready-to-use DEKASEPTOL can be applied straight into the suction hoses and systems. The special advantage of this is that the gel adheres to the critical points instead of just being rinsed through. Germ reduction of the patient's water supply is just as effortless with the OXYmat, as the OXYGENAL 6 bottle is also placed in the unit body. The correct amount of the respective cleaning agent is automatically dispensed. This does away with labour- and time-intensive manual preparation and eliminates the risk of incorrect dosing, while also preventing contact with the detergents.

Protected water supply system

KaVo instruments and motors have an anti-reflux system that prevents contaminated spray water from being sucked into the dental unit. This protects the water supply system.

The best light for exacting requirements

The KaVo Lumina treatment light can be operated directly via the intuitive dentist and assistant element. It can also be switched on or off via the automatic positions on your dental unit and the integrated sensor. Optimally coordinated with your KaVo uniQa, the KaVo treatment light offers excellent KaVo quality, maximum treatment comfort, perfect hygiene conditions and a long service life.

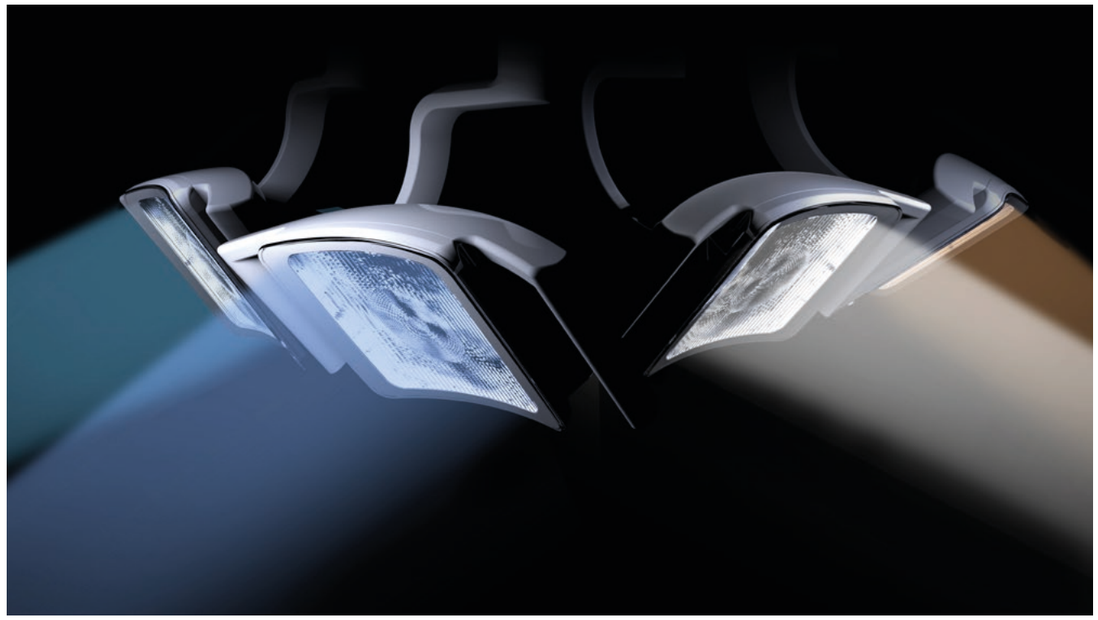

The innovative SPAlight provides a play of colours consisting of shades of blue and green that have a proven calming effect, according to cutting-edge colour psychology. This means it can be used to create a relaxing atmosphere and a spa-like vibe before and between treatments.

KaVo Lumina with UX Light Technology – enjoy the light side of dental life

The quality of the light itself adds to the premium comfort. The KaVo Lumina is setting new lighting standards in dental practices. A truly stunning piece of equipment, it takes lighting technology to a whole new level, boasts a variety of smart features and sets the gold standard in terms of user experience. The innovative UX Light technology enables perfect illumination of all levels right up to the molar area – without annoying reflections on the anterior teeth. Combined with the optimised light field, this is easy on the eyes and facilitates concentrated work. With its precise colour rendering, the natural light spectrum offers the ultimate in light quality, enhancing the day-to-day work of technology enthusiasts and design aficionados alike.

Ergonomics and comfort: the KaVo PHYSIO Evo

As a dentist, maintaining an ergonomically healthy and comfortable posture in every treatment situation is crucial. And nothing affects your posture more than the operator stool you sit on every day. The KaVo PHYSIO Evo and Evo F are precisely tailored to the needs and workflows of dentists and their assistants.

Ergonomic comfort is all about the detail.

Adjusting the seat and backrest to your anatomical requirements and your personal treatment style is easy with the separate adjustment functions. The back and seat upholstery of the KaVo PHYSIO Evo are ergonomically moulded. The centred elevation in the seat upholstery provides a stable sitting position and prevents slipping even during quick, short rolling movements. The rounded thigh support gives you plenty of freedom of movement. The spring-assisted backrest provides constant support for your back muscles, especially in the lumbar region, thus protecting them over the long term. Smooth workflows and superlative sitting comfort are standard with every treatment – safeguarding your health and ensuring pain-free working.

An outstanding concept

The KaVo PHYSIO Evo/Evo F treatment chair has been awarded the seal of approval by the "Healthy Back Campaign" (Aktion gesunder Rücken, AGR). An independent, multidisciplinary committee of experts issues this award based on strict test criteria for ergonomics and health.

Equipment options

Patient chair				
Soft upholstery	●			
RELAXline soft upholstery	○			
Backrest				
Progress (optimised)	●			
Headrest				
Double-jointed with mechanical clamp	●			
Comfort head cushion	○			
Armrest				
Left	○			
Right	○			
Dentist element	TM[3]	S	C	T
Touch display	●	●	●	●
SMARTdrive	●	●	●	●
5 instrument holders	●	●	●	●
6 instrument holders	○	○	○	○
Detachable instrument holder	●	●	●	●
Turbine hose	○	○	○	○
INTRA LUX Motor KL 703 LED™	○	○	○	○
Integrated torque control (endo)	○	○	○	○
KaVo eSCALER ultrasonic scaler	○	○	○	○
SONICflex™ sonic scaler	○	○	○	○
Triple function handpiece	x	x	x	x
Minilight triple function handpiece	x	x	x	x
Multifunction handpiece	○	○	○	○
Pump for saline solution	○	○	○	○
S600 LED surgical motor	○	○	○	○
Spray warming for instruments	●	●	●	●
USB interface	○	○	○	○
Pneumatic brakes for arm system	-	○	-	○
Tablet holder for two norm trays	●	●	-	●
Service table 1568 for two norm trays	-	-	○	-
Assistant element				
Capacitive touch panel	●			
5 instrument holders	●			
Spray mist suction	●			
Saliva ejector	●			
2. Saliva ejector	○			
Triple function handpiece	○			
Multifunction handpiece	○			

Satelec MiniLED polymerisation handpiece	○
Adapter for ProXam iOS intraoral scanner	○
Tray holder for tablet holder	○
Swivel- and height-adjustable	●
Selective support kit	●
Short arm	x
Right-/left-rotatable	○
Unit body	
Porcelain spittoon bowl	x
Glass spittoon bowl, smoky grey	x
Hygiene centre	●
Constant germ reduction[1]	●
Intensive germ reduction[1]	●
HYDROclean (suction rinsing system)	●
DEKAmat™ and OXYmat	●
Warm water boiler	●
VACUstopp	●
Wireless foot control	○
Supply system	
Compact water block[2]	○
DVGW water block	●
Connection to external devices	○
Vacuum control valve	○
CENTRAmat	○
Disposal system	
External wet suction system	●
DÜRR amalgam separator	○
DÜRR automatic separator	○
Treatment light:	
KaVo Lumina	○
Light mounting rod	○
Adapter for light mounting rod (e.g. for intraoral X-rays)	○
Patient communication	
KaVo CONNECTbase	○
KaVo CONNECTlink	○
CONEXIO	○
KaVo Screen	○
KaVo ProXam iCam	○
KaVo DIAGNOcam Vision Full HD	○

● Standard equipment | ○ Optional equipment | x Must be selected | – Not in stock
[1] Only in combination with DVGW water block and DVGW water bottle | [2] For a reduced price | [3] Only as a left-handed unit

“Inspired by Nature” upholstery colours

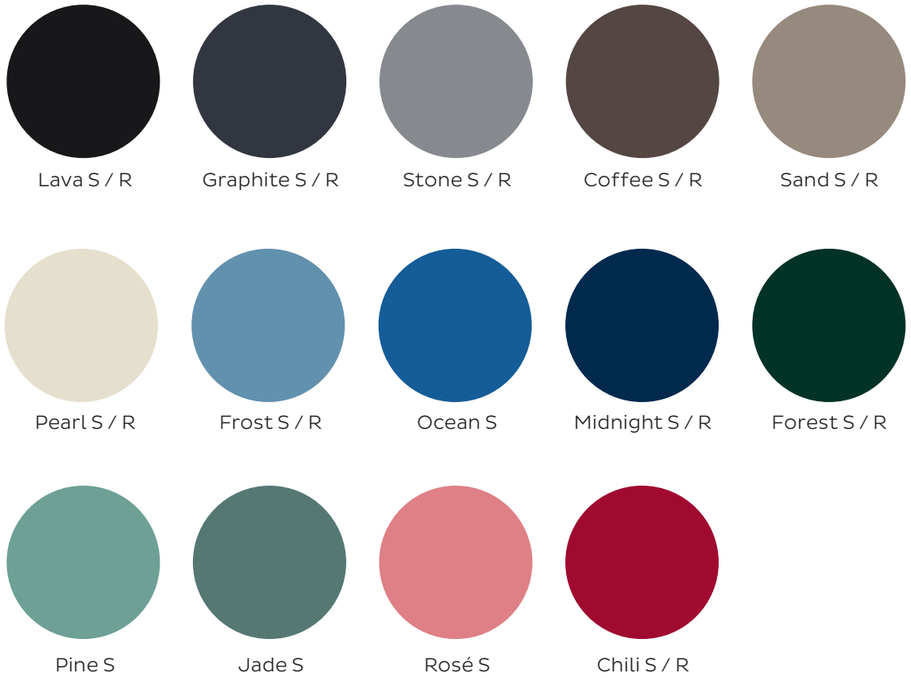

Available as:
S – Standard
R – RELAXline

Standard
Traditional upholstery with matt upper.

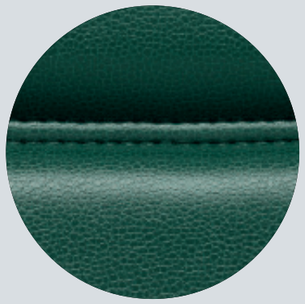

RELAXline
Leather-like upper, memory foam with decorative seams.

Top-quality modern design: all KaVo upholstery is crafted by hand in Germany, with design studio quality. Both the RELAXline upholstery with its soft, leather-like surface and high-quality seams and the traditional upholstery with a matt finish are elegantly complemented by the “Inspired by Nature” colour collection. Whichever upholstery line you choose, the colour collection creates promising options for setting aesthetic accents with your dental unit, in line with the latest interior trends.

Dental Excellence in every area

What our brand represents

KaVo is a long-established, dependable manufacturer, and always will be. We and our products have stood for the highest quality and reliability for over 100 years, so our customers can concentrate on what's important.

KaVo is adept and uncompromising when it comes to combining essential requirements, ergonomics, the highest standards of hygiene and design to create the best overall package. Thanks to our perfect interplay of dynamism and expertise, we're always at the cutting edge.

KaVo dental units –
an investment in your health

KaVo instruments –
feel the difference.

KaVo Imaging –
see more, plan better

Dental training –
effective learning

The products, equipment and services shown and described in this brochure are not available in every country. The information given here reflects the knowledge available at the time of printing. KaVo Dental GmbH accepts no liability for deviations in colour and form in the illustrations, or any errors or misprints, and reserves the right to make changes to the brochures at any time.

KaVo, ESTETICA, uniQa, amiQa, Primus and Lumina are registered trademarks of KaVo Dental GmbH.

KaVo Dental GmbH | Bismarckring 39 | 88400 Biberach | Germany
www.kavo.com

KAVO
Dental Excellence

90094051_en_REV2 | 03/2025 | © Copyright KaVo Dental GmbH