HEKA I+

Nordic DNA - designed for you

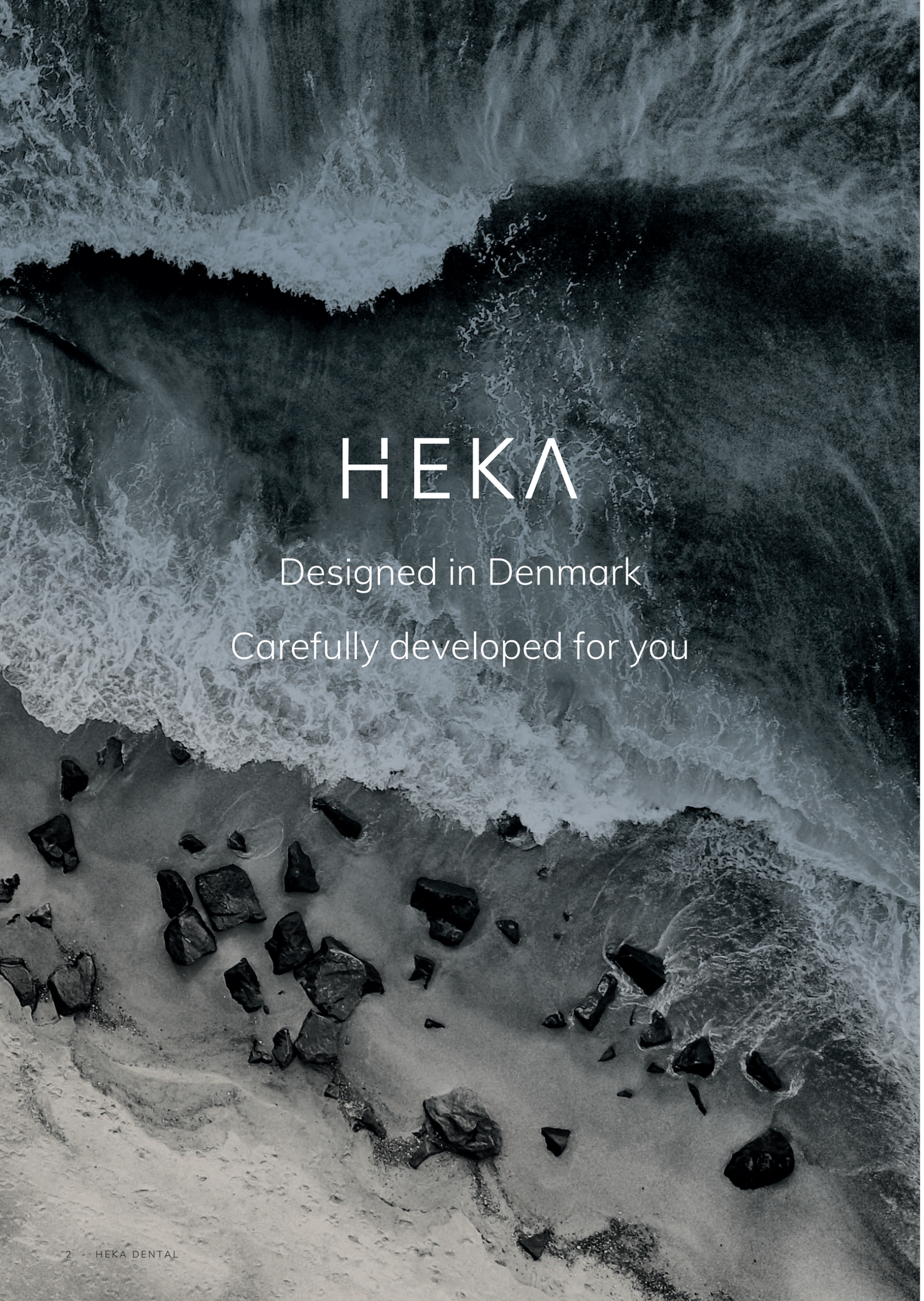

Heka I+

The elegant Heka I+ is a space-saving pillar unit in the well-known UnicLine S design, a beautiful, functional and Nordic design of high quality.

The delivery system on the Heka I+ is identical to the Heka S+ and thus has the same ergonomic balanced suspension of the instruments and the hygienic glass surface with integrated touch display that is easy and quick to clean.

With a Pillar unit, the ergonomic telescopic arm is placed with the suction on the chair or possibly, on the wall behind the chair and fully achieves the same flexibility and excellent ergonomics that is characteristic of all Heka models.

Heka I+ requires very little space and is therefore very suitable for smaller clinic rooms.

Like all Heka Dental's other products, Heka I+ is manufactured in Denmark.

Heka I⁺ - designed for your needs

Designing and manufacturing dental care units is in our DNA. We are specialists in dental care units - it is what we do, and we are proud of it. And it is humbling to recognise the vital role our equipment plays in your practice every day.

We strive to create security and comfort for you, your team and your patients. This is all reflected in our design, where the clinical aspect is more muted by creating a stylish piece of furniture. This is evident in the design of the Heka I⁺ with its clean lines and glass surfaces featuring an integrated display.

Every Heka dental care unit is individually manufactured to suit you and your team's unique preferences and requirements. This gives you optimal opportunity for simple and ergonomic work, where the Heka I⁺ guides you through treatments - both automatically and individually.

The Heka I⁺ also takes up less space, giving you more choice and freedom to design your practice as you want it - and at the same time allowing more dental care units in fewer square metres for your business.

Everything is where it should be - and everything makes sense

The Heka I+ comes with a range of programmable personalised settings that support your various treatments and processes throughout the working day, so that they are carried out simply and with minimal strain on you and your team.
The treatment flow is intact throughout and you can easily switch to the setting you want via the foot control without moving focus away from the treatment and the patient's mouth.

Some choose to combine the dental care unit and patient's chair into one locked dental care unit. The disadvantage with this, however, is that you are then unable to freely design your practice and position the dental care unit and patient's chair individually in relation to each other.

With the Heka I+, the dental care unit and patient's chair are not locked together. You have full freedom, which allows you to create the exact workspace that meets your needs - without having to compromise. We are sure that you and your team will appreciate the freedom the Heka I+ offers in your daily work, with a 180-degree workspace around the patient.

When designing your treatment room, it is easy to place the Heka I+ so that the patient can sit straight down without having to go around the dental care unit first. A small detail with great significance.

Pillar and base

The Heka I+ Unit is designed as minimalist as possible, with no unnecessary connections or other disruptive elements. The chair and suction are connected to the elegant floor box and, if desired, the suction arm can be installed away from the unit and the patients chair - for instance in a dental cabinet behind the head rest.

Integrated floor box
The base is available in two versions:

A floor box with integrated connection for suction. The suction will be chair-mounted with the telescopic head used also on Heka S+.

If the Heka I+ is ordered without suction in cases where a 3rd party suction is used, the floor box will be delivered without connections allowing for a completely smooth top plate.

Heka ID offers completely new flexible options

We always have you and your requirements in mind when we develop our products. With a Heka ID card, you can maintain the workflow you are used to without having to think about it. If your practice has several rooms with several dentists, or if many different treatments are carried out, a Heka ID card is a smart solution.

We have placed the contactless point in the middle of the delivery tray, making it easy to use for you and your assistant. You can have several different treatments on Heka ID cards, so it is easy to change the settings to a specific treatment.

The balance suspension is a key element in supporting an ergonomic workflow. Each instrument is individually calibrated, where the spring accurately neutralises the weight of the instrument at the patient's mouth - without pulling back.

This helps the Heka I+ to carry the instrument without impeding your freedom of movement. As a result, you can work with high precision, with minimal strain on your wrist and forearm.

The feedback we receive is that our products create an ergonomically practical solution because our dental care unit can easily be adapted and supports your many different working positions throughout a busy working day - and often without your having to think about it.

The narrow design of the delivery tray is one of the most important prerequisites for achieving the most ergonomic working positions around the patient without unnecessary lifting of the elbow and shoulders.

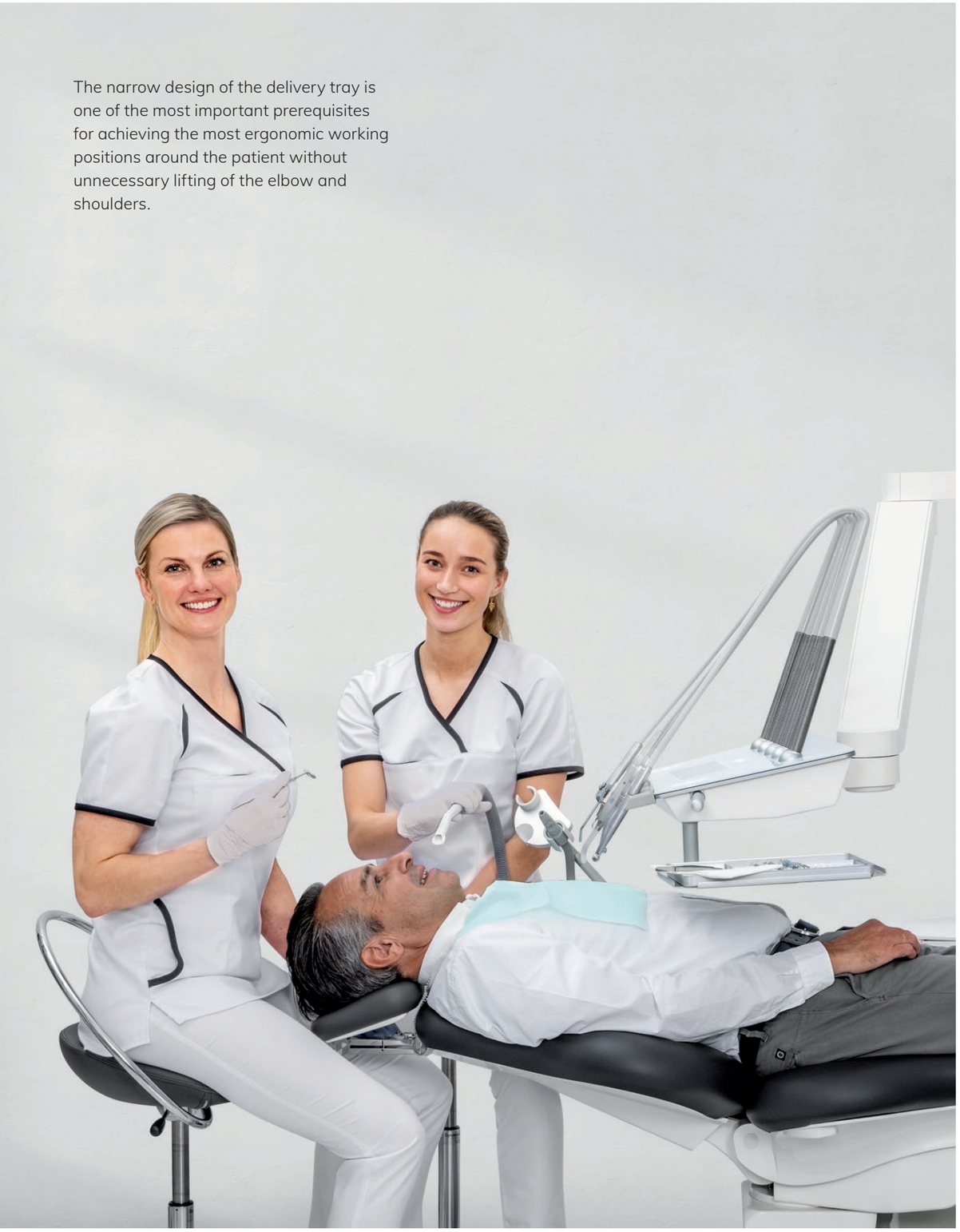

The display view with situational view, shown here with the low-speed instrument - micromotor.

A typical problem is that too much information on the display quickly becomes unmanageable and therefore requires time longer to focus on it. With Heka One Connect, we have therefore made it possible for you to choose which information is displayed in any given situation, so that you can get an overview at a glance. We believe that it should be easy to select the information that should be visible in selective view.

Get an overview at a glance

Our advanced motor control makes it possible to control all parameters such as torque, direction of rotation, speed of rotation as well as chip blow, spray selection, sterile water flow and functions such as Auto Reverse and Auto Forward.

To make it easy and precise to achieve the desired speed, you can set min / max in the working range for which you wish to adjust the speed within via the foot control. In this way you can ensure that you e.g., will not exceed the maximum rate of ongoing treatment.

Via the touch display and keys on the dashboard you can change or adjust the current settings

With Heka One Connect, you can set and customise your Heka I+ dental care unit to suit your working day - and it is also easy to extract data if you need an overview of treatment information. A clever feature is that with selected spray water on the turbine or the motor instrument, both automatic and mechanical blowing can be selected - so you will not need air from the syringe instrument to dry or remove liquid from the area.

Delivery system

The delivery system is of the same design and quality as known from UnicLine S.
Below the glass surface the display and touch keys are integrated - they are only visible when relevant to the situation-specific function - creating a simple expression and avoiding eye strain.
With a tempered glass surface, we have created the most hygienic surface of a dental treatment unit, and for ease of cleaning, the display and touch keys can be rendered inactive.
In addition, the integration of displays provides an easier and smaller surface to be cleaned between patients.

Features that support your working day

At Heka Dental, we consider the arm for the instrument table to be a very important part of the units. On all dental units from Heka Dental, the arms for the instrument table are very long, and they are constructed of the best materials and equipped with oversized ball bearings in all joints. This means you can position the instrument table so that you can always work ergonomically correctly. This also means that the movements in the arm are very easy and comfortable.

For Heka I⁺, this also means that the unit will be very flexible (ambidextrous), so that many dentists can work on the same unit. Both right- and left-handed dentists can easily work in optimal ergonomic positions.

In addition, the suction on the Heka I⁺ is mounted on the chair as standard and can be turned both to the right and to the left. It is also possible to install the suction behind the unit in 12 o'clock position.

Heka I⁺ will be the perfect unit for those who want a right-left hand unit (ambidextrous equipment), and it is regardless of whether you work with 2 or 4 hands in the treatment situation.

The unit can be transformed from being a right-hand unit to a left-hand unit in a few seconds, and at the same time have a firm and stable construction and installation that will last for many years.

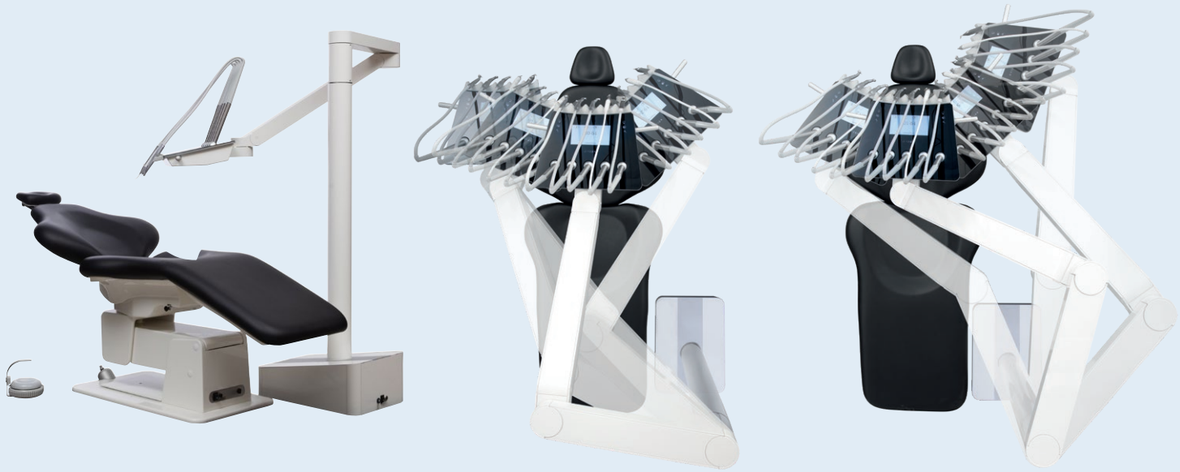

Prioritising top hygiene - together with you

Heka I⁺ is designed to be as hygienic and clean as possible.

Tempered glass surface
It includes well thought out details such as the use of the hardened glass surface on the dashboard which, due to the hard, smooth surface, is particularly effective in cleaning and disinfecting.

The integrated touch display ensures that there are no buttons or switches, which can collect dust and dirt.

The display can, of course, be locked during cleaning and automatically unlocks after 2 minutes, so the unit is ready again before the next patient.

Natural contact points
Natural contact points, such as handles and instrument covers, can easily be removed for cleaning and autoclaving.

This also includes the handles for the operating lamp.

Please refer to the equipment list for additional equipment that optimizes the hygiene of a Heka I⁺.

Suction

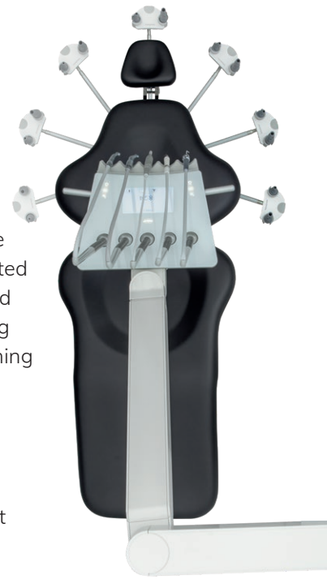

The telescopic arm with the suction can easily be adjusted to work 180 degrees around the patient to avoid twisting the upper body when reaching for the suction.

The telescopic arm can be adjusted from two to four-handed treatment or from right- to left-handed dentist in seconds.

The suction comes as standard with two selective suctions and adjustable hand pieces or with hygienic, autoclavable aluminium hand pieces for surgery.

The holder is available in an open or closed version. The telescopic arm is mounted on the chair base, under the patient.

Options and equipment

Instrument flush
The instrument flush is connected on the suction hose via an adapter.

Automatic suction cleaning:
With the automatic suction cleaning, a nozzle is activated at the end of the suction hoses, which continuously cleans the suction system with chemicals or just clean water and helps to keep the entire suction system clean and efficient.
It is possible to activate flushing with chemicals or only water while working with a patient.
This ensures effective removal of all impurities without the hose drying out, to prevent the impurities solidifying on the inside of the hose.
Regular flushing with active chemicals between patients or in the evening can ensure that colony forming units, germs and bacteria in the suction system are reduced.

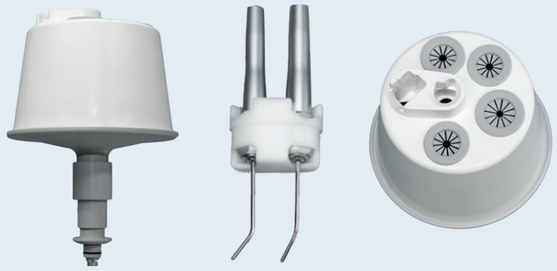

Cup holder and instrument hanger for tray
It is possible to mount both cup holder and instrument bracket and combine them as desired.

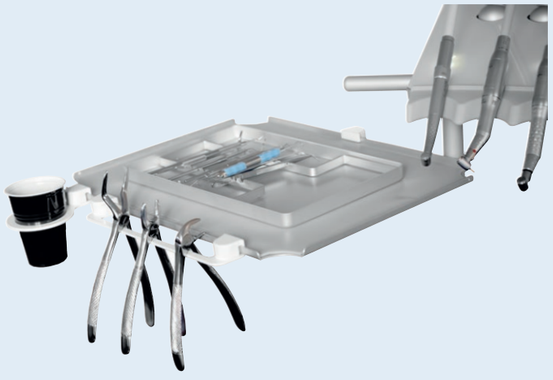

External 2L water bottle
In addition to connecting to the public water supply, the Heka I+ can be equipped with a system of independent water supply via a 2L bottle.
This system can also be used to flush the unit's hoses with cleaning fluid.

A large assistant unit will always restrict you from being able to position it correctly in relation to the treatment and your body. We have therefore worked to make the assistant unit very small and flexible, so that it provides the best positioning in all treatment situations, both sitting and standing, without straining your body during treatment.

HEKA I+

Included in Heka I+ on delivery (depending on chosen options):
- Quality product made from aluminium and glass
- Quality valves from Germany
- Lacquered surfaces in aluminium
- Surface on delivery system in tempered glass with integrated touch buttons
- Instrument arm in cast aluminium
- Oversized double needle bearings in middle arm and delivery system
- Instrument arm with 337° rotation offers both right- and left-handed operation
- Instrument arm with double spring supported height adjustment
- Adjustable setting of joints and height adjustable instrument arm.
- Lighting ergonomics
- Individually balanced instruments
- Optional delivery system for five or six instruments
- Hygienic, integrated multi-touch panel in the glass surface of the delivery system
- Hygienic, autoclavable instrument holders
- Removable, autoclavable handles on delivery system
- Return air filter
- Selective suction (large and small)
- Multi-flexible telescopic suction holder

Additional equipment and options:

Turbine:
- Multiflex high speed, fibre optic outlet

Micromotors:
- Bien Air MX2 incl. Optima control 100-40.000 rpm/min. (up to 2 pcs.)
- Bien Air, MCX brushless, 1000-40.000 rpm/min. (up to 3 pcs.)

Syringes:
- UNIC, 3:1
- Luzzani, 3:1 or 6:1
- Luzzani, 7:1 with/light

Scaler:
- Newtron (with/without LED)
- W&H with LED
- EMS "No Pain" (with/without LED)
- NSK Varios (with/without LED)
- EMS Airflow: built-in version

Curing light:
- UNIC (Bluedent Express)
- Starlight Sler (with button or foot control activation)
- Acteon MiniLED

Intraoral Camera:
- Sopro 617 or Soprocare, excl. software
- Dürr VistaCam iX HD

Instrument arm- and delivery system options:
- Tray support in various lengths
- Optional double tray support
- Single or double tray
- Protection sheet for tray (autoclavable)

Monitor:
- 22" monitor mounted on lamp support with flexible arm
- iPad/tablet holder (on delivery system)

Water- and water treatment:
- External water bottle - 2 liter
- Automatic instrument flush
- Sterile water pump
- Automatic suction cleaning system

Operation lamps and room light:
- Faro EVA LED operation lamp 50.000 Lux, 4000K, 5000K or 5700K, with Composave mode (11.000Lux/2700K), for Heka Design arm
- Faro EVA Cam LED operation lamp, specifications identical to std. EVA lamp, as well as with integrated D-Camera, for Heka Design arm
- Faro EVA LED operation lamp, specifications identical to std. EVA lamp, as well as built-in THEIATECH LED and Heka Design arm
- Faro Maia LED operation lamp 35.000 Lux, 5000K with standard arm
- Faro Sidèrea LED room light

X-ray:
- It is not recommended to install X-Ray on Heka I+

Foot control:
- Ergonomic round (wired or wireless)
- Round variable (wired or wireless)
- Universal variable (wired or wireless)

UnicLine patient's chair:
- Two electric motors
- Approved up to 180 kg
- High lifts for standing treatment
- Horizontal position available
- Double-articulated head rest
- One joystick (up to 3 joysticks possible)
- Four 4 programs or 3 programs and 'Last Position'
- Headrest with hole
- Armrest - right and/or left, revolving
- Footrest, foldable
- Hanger for foot control

Upholstery:
- Comfort Shape Upholstery (standard)
- Comfort Memory Upholstery

View available upholstery colours on www.heka-dental.com

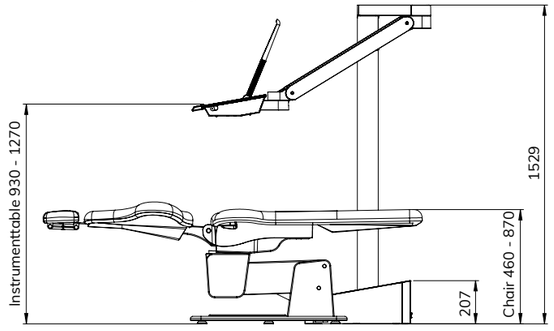

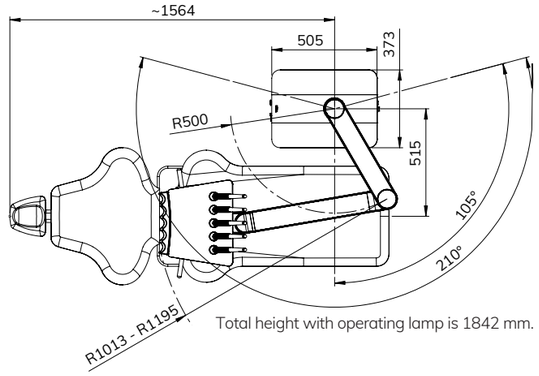

Total height with operating lamp is 1842 mm.

We take responsibility - ensuring the best care for you

We always have a team of specialists available to solve problems.

At Heka Dental and our dedicated partners, we know how important it is to your practice that you have the highest uptime at your treatment facilities. Which is why we never compromise on the choice of materials when we build your dental care unit and we are proven to be among the best on the market with regards to longevity and reliability.

In the event of a problem, we always have a network of technicians available, who can visit your practice to ensure you are up and running in no time and create value for your business. With local spare parts warehouses in Europe and overseas markets, we can always deliver quickly.

We are thinking about the next generations

- Heka Dental helps minimise our environmental impact, as this is reduced thanks to the long service life of our products.
- We use aluminium that has a life cycle that only very few metals can match, and we also use recyclable aluminium.
- We work continuously with our suppliers to reduce energy requirements in our production process by finding better alternatives for transport, and in our development and design particularly, we work with solutions to ensure that our products can be reused to a greater extent.

HEKA
DENTAL®

Heka Dental A/S
Litauen Alle 4
DK-2630 Taastrup
Denmark
P: +45 4332 0990
M: info@heka-dental.dk
www.heka-dental.com

Homepage

Facebook

LinkedIn

Instagram

With reservation of technical changes and colour changes. Images may be displayed with optional equipment - 31065 - 2/2024