HEKA G+

Nordic DNA - designed for you

HEKA G+

Heka G+ Black edition with black glass surfaces.

HEKA G+

Heka G+ - designed for your needs

Designing and manufacturing dental care units is in our DNA. We are specialists in dental care units - it is what we do, and we are proud of it. And it is humbling to recognise the vital role our equipment plays in your practice every day.

We strive to create security and comfort for you, your team, and your patients. This is all reflected in our design, where the clinical aspect is more muted by creating a stylish piece of furniture. This is evident in the design of the Heka G+ with its clean lines and glass surfaces featuring an integrated display.

Every Heka dental care unit is individually manufactured to suit you and your team's unique preferences and requirements. This gives you optimal opportunity for simple and ergonomic work, where the Heka G+ guides you through treatments - both automatically and individually.

The Heka G+ also takes up less space, giving you more choice and freedom to design your practice as you want it - and at the same time allowing more dental care units in fewer square metres for your business.

HEKA G+

Job satisfaction every day - for generations

From one generation to the next - It makes us proud when we see that the choice of Heka equipment continues from one generation to the next. This is possible because we are constantly updating your dental care unit and introducing new options and instruments. This ensures you get the latest developments, the best features, and the highest standard, as well as an updated dental care unit that will last for many years. Our products are characterised by a long service life, which also supports our efforts to reduce the environmental impact.

We love our work and go all the way to give you the perfect product. We have spent time on every detail of Heka G+ because we know you will want to enjoy it for many years to come. For example, the delivery tray and the top of the console is CNC machined from an entire piece of aluminium and then mounted with a glass plate. This provides the most hygienic surface available while also integrating the display and keys. This is more expensive and difficult, but we believe it is essential for the overall experience.

Heka G+ offers top ergonomic working conditions

HEKA G+

Everything is where it should be - and everything makes sense

The Heka G+ comes with a range of programmable personalised settings that support your various treatments and processes throughout the working day, so that they are carried out simply and with minimal strain on you and your team. The treatment flow is intact throughout and you can easily switch to the setting you want via the foot control without moving focus away from the treatment and the patient's mouth.

Some choose to combine the dental care unit and patient's chair into one locked unit. The disadvantage with this, however, is that you are then unable to freely design your practice and position the dental care unit and patient's chair individually in relation to each other.

With the Heka G+ the dental care unit and patient's chair are not locked together. You have full freedom, which allows you to create the exact workspace that meets your needs - without having to compromise. We are sure that you and your team will appreciate the freedom the Heka G+ offers in your daily work, with a 180-degree workspace around the patient.

When designing your treatment room, it is easy to place the Heka G+ that the patient can sit straight down without having to go around the dental care unit first. A small detail with great significance.

The narrow design of the delivery tray is one of the most important prerequisites for achieving the most ergonomic working positions around the patient without unnecessary lifting of the elbow and shoulders.

HEKA G+

The distance from the instruments to the table can be easily adjusted to match your exact height, and the individual instrument holders can be angled to always provide a perfect grip on the instrument - both when it is taken and put back.
The long instrument hoses give you the best opportunities to work ergonomically correct.

The large tray for hand instruments can hold 3 standard cassettes and positioned to ensure that everything is within reach.

The feedback we receive is that our products create an ergonomically practical solution because our dental care unit can easily be adapted and supports your many different working positions throughout a busy working day – and often without you having to think about it.

Heka ID offers completely new flexible options

We always have you and your requirements in mind when we develop our products. With a Heka ID card, you can maintain the workflow you are used to without having to think about it. If your practice has several rooms with several dentists, or if many different treatments are carried out, Heka ID card is a smart solution.

We have placed the contactless point in the middle of the delivery tray, making it easy to use for you and your assistant. You can have several different treatments on Heka ID cards, so it is easy to change the settings to a specific treatment.

Full focus on the patient

We all know the daily situation where you want to maintain focus on the patient's mouth, but you are forced to look elsewhere to check the instrument's settings - most often to see simple information about the instrument spray. The Heka G+ projects the spray pre-selection onto the patient's napkin, allowing you to skim the setting in the peripheral field of view. This considerably reduces strain on the neck and eyes.

On the Heka G+ we have situated all the instrument information centrally on the delivery tray so that both you and your assistant can easily get an overview of the settings. The screen display can be operated by touch and we have made sure that the necessary functions can be changed via the foot control to minimise touching the delivery tray.

The display view with situational view, shown here with the low-speed instrument - micromotor.

A typical problem is that too much information on the display quickly becomes unmanageable and therefore requires longer to focus on it. With Heka One Connect, we have therefore made it possible for you to choose which information is displayed in any given situation, so that you can get an overview at a glance. We believe that it should be easy to select the information that should be visible in selective view.

Get an overview at a glance

Our advanced motor control, it makes it possible to control all parameters such as torque, direction of rotation, speed of rotation as well as chip blow, spray selection, sterile water flow and functions such as Auto Reverse and Auto Forward.

To make it easy and precise to achieve the desired speed, you can set min / max in the working range for which you wish to adjust the speed within via the foot control. In this way you can ensure that you e.g., will not exceed the maximum rate of ongoing treatment.

Via the touch display and keys on the dashboard you can change or adjust the current settings.

With Heka One Connect, you can set and customise your Heka G+ dental care unit to suit your working day - and it is also easy to extract data if you need an overview of treatment information.

A clever feature is that with selected spray water on the turbine or the motor instrument, both automatic and mechanical blowing can be selected - so you will not need air from the syringe instrument to dry or remove liquid from the area.

HEKA G+

Features that support your working day

The Heka G+ arm set has full movement allowing you to choose how to position the delivery tray.

All movable joints in the dental care unit arm are equipped with double needle bearings. This ensures that it is very easy and comfortable to move around on the delivery tray. In addition, the needle bearings in the Heka G+ are oversized to ensure that, right from the start, the movement is maintained throughout the Heka G+'s lifetime and at the same time functions with millimetre-fine accuracy in any position, even with the varying loads from the tray, monitor, X-ray and light.

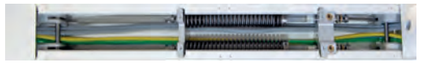

The wireless foot control

The wireless foot control enables multifunctional, hands-free operation of the most important functions throughout the treatment process. We have developed three different types, each with their own options for adapting your way of working, while ensuring that switching between several different types of dental care units will not present any challenges, providing flexibility in choosing a specific treatment room during a busy working day. A clever feature of the round foot control is that it can be used from all angles, so that you are ensured the most ergonomic working position that suits you without having to move the foot control during treatment.

Ideal working conditions

A relaxed patient means ideal working conditions. With the Heka G+ we have created a treatment chair that suits your entire team and the patient. You have ideal working conditions, whether you are sitting or standing, which is important because you can feel when you have the right position for both your body and your work. At the same time, the thin and narrow back allows you to adopt the best position close to the patient during treatment.

The experience of the patient's chair, choice of materials and colours complements the stylish, light design of the Heka G+. At the same time, we have emphasised functionality and easy adjustment of the chair with a foot-operated joystick or via the keyboard on the delivery tray and console.

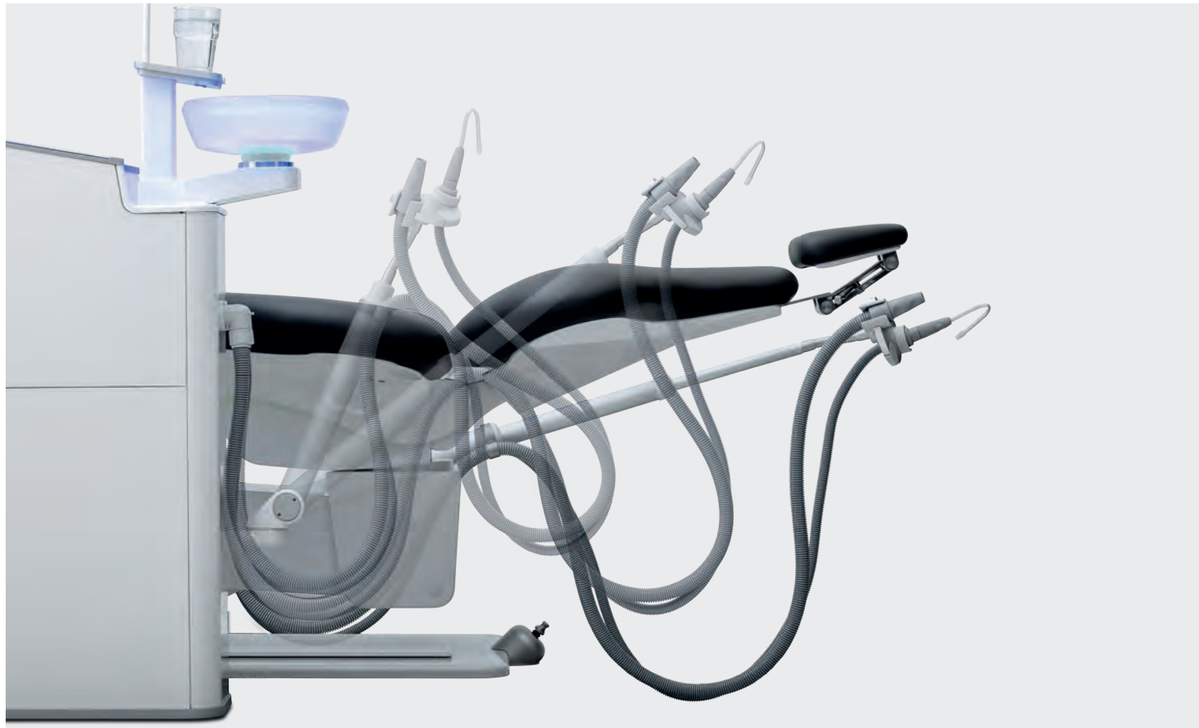

Solutions you will love

The physical shape and size of the assistant unit is the most important factor in placing the element in a position where you sit ergonomically and at the same time avoid twisting your back. The smaller the better.

A large assistant unit will always restrict you from being able to position it correctly in relation to the treatment and your body. We have therefore worked to make the assistant unit very small and flexible, so that it provides the best positioning in all treatment situations, both sitting and standing, without straining your body during treatment.

In situations where you need to stop the large suction unit, we have placed a footswitch that stops it with light pressure without you having to place the suction unit in the assistant element. A solution that eliminates unnecessary twisting of your back during treatment.

The assistant element is located on a flexible telescopic arm that ensures you optimal positioning in both 2- and 4-handed treatments. It provides great flexibility in choosing practice rooms in a busy day.

The assistant unit is placed on a flexible telescopic arm, which ensures the best position with both 2- and 4-handed treatments. This gives you great flexibility in choosing a treatment room during a busy working day.

Hygienic operation

The functions you use most often are located on the glass top of the console and delivery tray. We have focused on only showing the relevant functions depending on the treatment situation, so that you have an overview at a glance. The functions you can use are positioning of the patient's chair, automatic suction cleaning, automatic/manual glass filling and rinsing of spittoon bowls. There is also the option of changing the flow of fluid with sterile water systems.

For your safety, we have added information to the delivery tray display, which quickly and easily tells you if the dental care unit needs your help.

Document your work

With the Heka G+ it is easy to document your work, which benefits you and reassures the patient regarding their treatment.

The Heka G+ can be supplied with several different models of intraoral camera that can be connected to the treatment room's PC, and the image can be displayed on a 22" screen on the dental care unit. Alternatively, it is also possible to mount an iPad/tablet holder on the delivery tray for displaying e.g., X-rays.

To ensure an easy and fast multimedia solution, both the camera and monitor are connected to your existing solution in the practice, and you are not locked into an all-in-one system without the freedom to choose the best for your practice. This means less investment, and you have the same system in all treatment rooms, regardless of the type of dental care unit.

HEKA G+

A perfect treatment light

A perfect working light is one of the prerequisites for giving the patient the benefit of your professional knowledge regarding their treatment.
The Heka G+ comes with the EVA lamp, which marks a new age of technology by offering the highest standard of visual comfort and lighting experience to the medical team and the patient.

EVA Cam is identical to the Eva Lamp, but also has an integrated HD camera with all-in focus.

The light head is fitted with two mirrors that ensure a shadow-free working area. The light arm has a length that makes it easy to light up from behind the patient's head and illuminate the lower jaw.

Via Heka One Connect, the intensity of the light can easily be pre-set under the individual user, for example, you can set to automatic activation of Composave when using the light polymerisation lamp, switching back when the patient chair is in motion.
The operation lamp is available in different types and can also be supplied ceiling mounted, making the Heka G+ a very light clutter-free design. If you have a lamp that you prefer, it is of course possible to install it on your new Heka G+.

On EVA, you can select the ideal color temperature for the dental practice: 5700K, 5000K, 4000K, or 2700K Composave function.

HEKA G+

Prioritising top hygiene, - together with you

We have designed the Heka G+ with a focus on enabling you and your team to meet the highest infection control standards using individual manual and automated processes that can subsequently document whether they have been completed satisfactorily. In terms of hygiene, this creates peace of mind for your entire team and your patients, while avoiding unnecessary time wasting.

All surfaces of the Heka G+ are smooth and we have used tempered glass on the delivery tray and console top, which is the most hygienic surface available. The display and touch keys can of course be made inactive during cleaning, which adds security and makes it easier to keep surfaces clean.

The aluminium handles, instrument cover and spittoon bowl can be easily removed for cleaning, and with several sets of these, you can easily switch between patient treatments.

The design makes it possible to hide filters and liquids without the risk of encountering electronics or power supply to the Heka G+.

The Heka G+ can be supplied with automatic instrument water flushing. This ensures that the water system, tubes, and instruments are flushed through and ready for the next patient - quickly and easily.

The delivery tray's display shows the status of the process and this can be documented via Heka One Connect.

By briefly pressing the C key, the automatic suction cleaning process begins, in which the individual suction hose is flushed through with cleaning fluid by vacuum, so you are quickly ready for a new patient.

The display on the delivery tray indicates whether the process has been completed correctly. At the same time, you have the option of documenting the process via Heka One Connect.

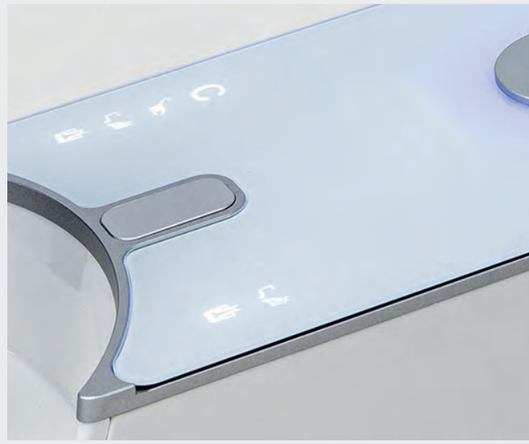

Options that make the Heka G+ your own

We do our utmost to create solutions for your needs, but if you require something outside our standard options, you are always welcome to contact us, and we will find a solution together with our partners. We would like to work for you to enjoy our dental care unit for many years.

There are a lot of exciting options and more will be added. We therefore have references below, so that you can easily see more information about the opportunities offered by the Heka G+.
If there is an option you do not have, we are happy to listen and check whether it can be a solution that both you and your colleagues can benefit from.

Sterile water system

Detachable instrument hoses

Heka ID card

Tablet holder

Multimedia screen

X-ray support

Instrument flush

Automatic flushing system

Water bottle system 1 or 2 l.

Automatic suction system cleaning

Ergo suction

Assistant arm mounted on aatient chair

Ambient light

Heka design arm

Standard arm

USB power out

Quick coupling for water and air

Schuko power outlet external

Dual screen

Heka G+ Black Edition with black glass surfaces

The Heka G+ comes with three different options for three individual spittoon bowl solutions, one of which can be rotated.

Patient chair in horizontal position

Comfort Shape
Comfort Memory

Easily removeable upholstery

Up to 3 joysticks

Double articulating neck rest

Open neck support

Armrest

Foot control hanger

Fold-down footrest

Heka G+ specifications and dimensions

This illustration is based on Heka G+ with integrated cuspidor.
Heka G+ and some of its parts are design-protected; some Heka G+ parts are patent-protected.

	Instrument table height A	Main arm height B	Overall height C
Low column	~810 - ~1120	1320	1743
Middle column	~915 - ~1225	1425	1849
High column	~1015 - ~1325	1525	1949

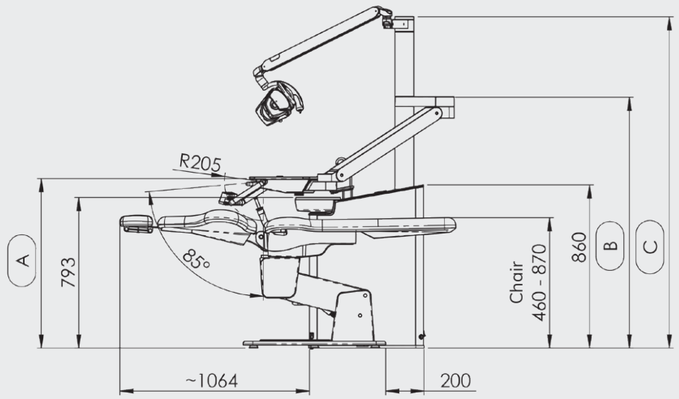

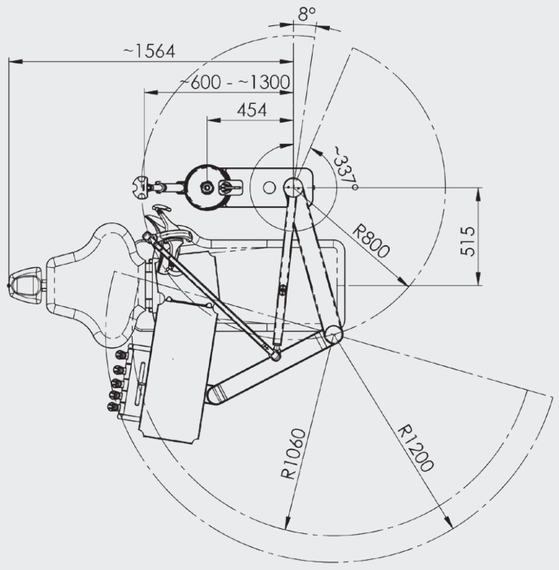

With reservation of technical changes and colour changes. Images may be displayed with optional equipment.
Images may be displayed without safety labels.

Heka G+

Included in treatment center on delivery (depending on chosen options):
- Quality product build in aluminium and glass delivery table with integrated large tray with space for 3 standard cassettes
- Quality valves from Germany
- Lacquered surfaces in aluminium
- Surface on console and delivery tray in tempered glass with integrated touch buttons
- Instrument delivery arm in cast aluminium
- Oversized double needle bearings in console, middle arm and delivery tray
- Instrument arm with double spring supported height adjustment
- Adjustable setting of joints and height adjustable instrument arm.
- Light ergonomics
- Individually balanced instruments
- Optional delivery tray for five or six instruments
- Hygienic, integrated multi-touch panel in the glass surface of the console and delivery tray
- Integrated display in delivery tray
- Hygienic, autoclavable instrument support
- Removable, autoclavable handles on delivery tray
- Return air filter
- Removable glass spittoon
- Selective suction (large and small) on multi-flexible telescopic assistant arm

Additional equipment and options:
- Instrument hoses with quick connector

Turbine:
- Multiflex high speed, fibre optic outlet
- option for variable turbine control

Micromotors:
- Bien Air MX2 with or without iOptima control 100-40.000 rpm/min. (up to 2 pcs.)
- Bien Air, MCX, 1000-40.000 rpm/min. (up to 3 pcs.)
- Bien Air MX-I 100-40.000rpm/min autoventilated, for implantology and surgery

Syringes:
- UNIC, 3:1
- Luzzani, 3:1
- Luzzani 6:1 with heating
- Luzzani, 7:1 with heating and light

Scalers:
- Newtron with/without LED
- W&H with LED
- EMS "No Pain" with/without LED
- NSK Varios with/without LED
- EMS Airflow: built-in version

Curing light:
- UNIC (Bluedent Express)
- Starlight Sler (with button or foot control activation)
- Acteon Mini LED (with button or foot control activation)

Intraoral Cameras:
- Sopro 617 or Soprocare, excl. software
- Dürr VistaCam iX HD

Monitor:
- 22" monitor mounted on lamp support with flexible arm
- iPad/tablet holder on delivery tray

Water- and water treatment:
- Water decontamination with or without air gap
- Internal water bottle - 1 litre
- External water bottle - 2 litre
- Automatic instrument flush
- Sterile water pump
- Automatic suction cleaning system

Drain:
- Dürr spittoon valve
- Metasys spittoon valve
- Dürr Combi Separator amalgam separation
- Metasys Amalgam separation
- Metasys separator for air and water

Console:
- Integrated-, revolving- or no cuspidor
- Multi-colour LED in console and spittoon bowl
- Water heater for cup fill
- Water heater for cup fill and instruments
- Quick coupling for suction
- Quick coupling for water and air
- 230V Schuko power socket
- X-ray support
- USB-socket
- Ergo suction stop

Operation lamps and room light:
- Faro EVA LED operation lamp 50.000 Lux, 4000K, 5000K or 5700K, with Composave mode (11.000Lux/2700K), for Heka Design arm
- Faro EVA Cam LED operation lamp, specifications identical to std. EVA lamp, as well as with integrated HD-Camera, for Heka Design arm
- Faro EVA LED operation lamp, specifications identical to std. EVA lamp, as well as built-in THEIATECH LED and Heka Design arm
- Faro Maia LED operation lamp 35.000 Lux, 5000K with standard arm • Faro Sidèrea LED room light

X-ray:
- X-Mind x-ray D/C: UNIC version

Instruments on assistant arm:
- UNIC 3:1
- Luzzani 3:1
- Curing light with button activation

Foot control:
- Ergonomic round (wireless)
- Round variable (wireless)
- Universal variable (wireless)

UnicLine patient's chair:
- Two electric motors
- Approved up to 180 kg
- High lifts for standing treatment
- Horizontal position available
- Double-articulated head rest
- One joystick (up to 3 joysticks possible)
- Large headrest with hole
- Armrest - right and/or left, revolving
- Footrest, foldable
- Hanger for foot control

Upholstery:
- Comfort Shape Upholstery (standard)
- Comfort Memory Upholstery

View available upholstery colours on www.heka-dental.com

We take responsibility - ensuring the best care for you

We always have a team of specialists available to solve problems.

At Heka Dental and our dedicated partners, we know how important it is to your practice that you have the highest uptime at your treatment facilities. Which is why we never compromise on the choice of materials when we build your dental care unit, and we are proven to be among the best on the market with regards to longevity and reliability.

In the event of a problem, we always have a network of technicians available, who can visit your practice to ensure you are up and running in no time and create value for your business. With local spare parts warehouses in Europe and overseas markets, we can always deliver quickly.

We are thinking about the next generations

- Heka Dental helps minimise our environmental impact, as this is reduced thanks to the long service life of our products.
- We use aluminium that has a life cycle that only very few metals can match, and we also use recyclable aluminium.
- We work continuously with our suppliers to reduce energy requirements in our production process by finding better alternatives for transport, and in our development and design particularly, we work with solutions to ensure that our products can be reused to a greater extent.

HEKA
DENTAL®

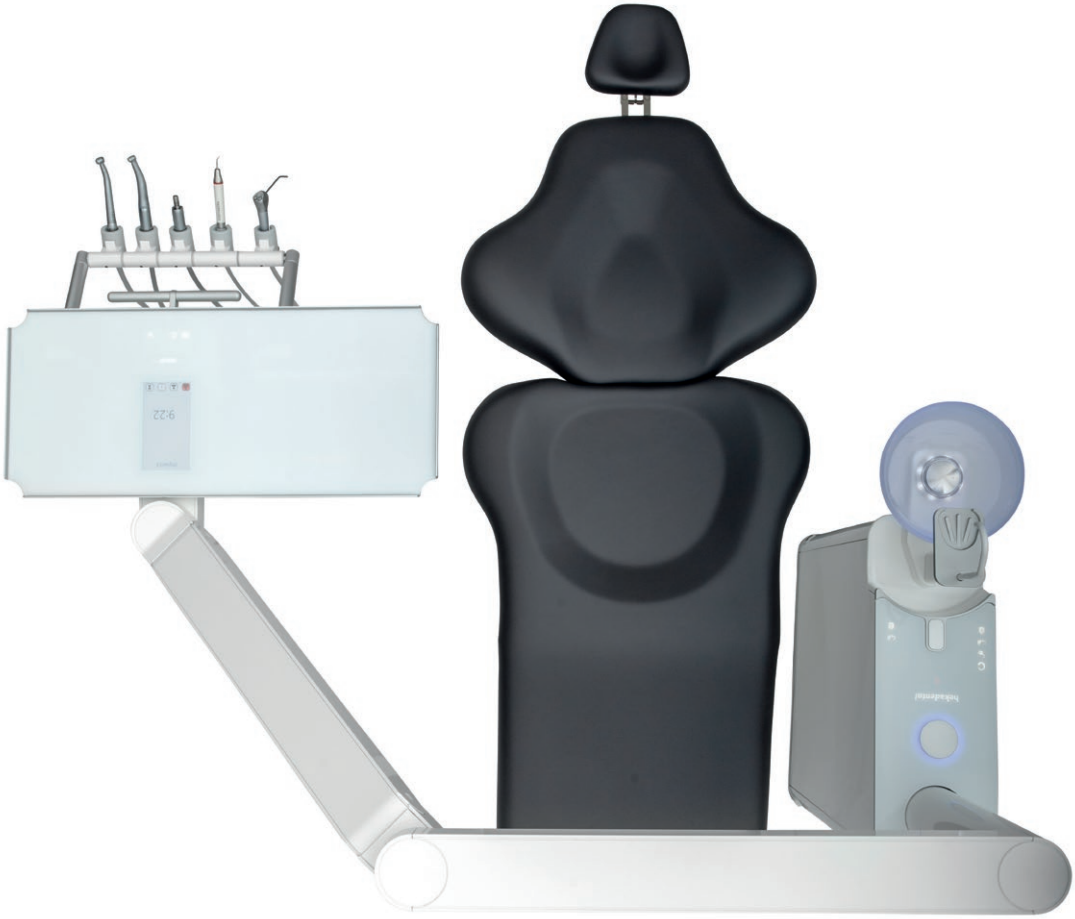

Heka Dental A/S
Litauen Alle 4
2630 Taastrup
T: +45 43 32 09 90
M: info@heka-dental.dk
heka-dental.com

Homepage

Facebook

LinkedIn

Instagram

1/2023 – 30615